M/035/002
NRDC

KENNECOTT UTAH COPPER CORPORATION

SOUTH FACILITIES GROUND WATER REMEDIAL ACTION PRELIMINARY DESIGN

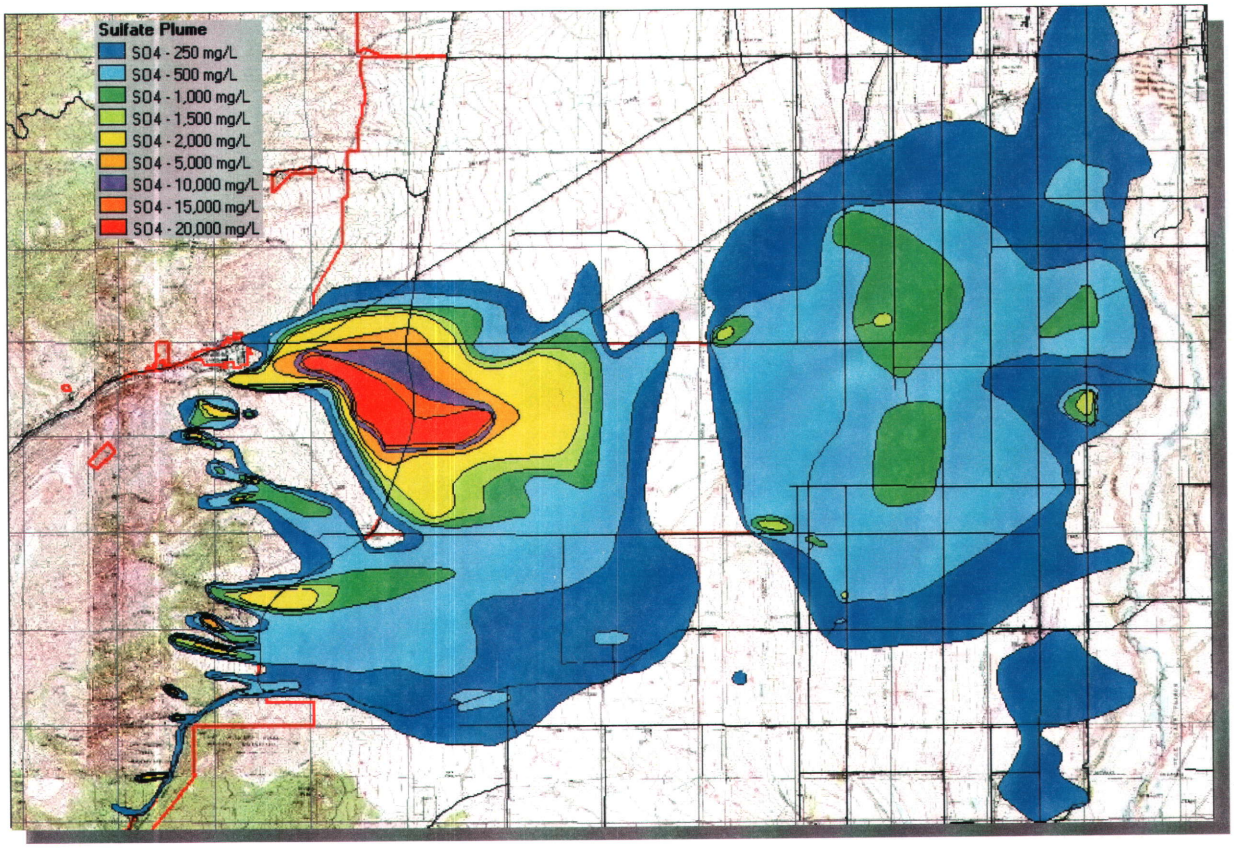

Prepared by:

Kennecott
Utah Copper

RECEIVED
FEB - 4 2002
DIV. OF OIL, GAS & MINING

Date: January 31, 2002

File in:
☐ Confidential
☐ Shelf
☐ Expandable
Refer to Record No 0004 Date 2/04/02
In M/035/002, 2002, Incoming
For additional information

Table of Contents

1.0 INTRODUCTION **1**
1.1 Purpose of Preliminary Design 1
1.2 Site Background and Summary of Site Conditions and Risks 1
1.2.1 Study Area 1
1.2.2 Site Description 3
1.2.3 Summary of Site Characteristics and Risks 3
1.3 Description of Selected CERCLA Remedy 5
1.4 Overview of Implementation 6
1.4.1 Technical Approach 6
1.4.2 Updated Failure Modes and Effects Analysis (FMEA) 6
2.0 PROJECT ORGANIZATION AND RESPONSIBILITIES **10**
2.1 KUCC Personnel 10
2.2 Consultants/Contractors 12
2.3 Government Oversight: EPA/UDEQ 12
2.4 Technical Review Committee 13
3.0 PRELIMINARY DESIGN **14**
3.1 Purpose. Scope and Objectives of the Design 14
3.2 Groundwater Containment and Extraction 14
3.2.1 Acid Plume Containment and Extraction 17
3.2.1.1 Acid Well Construction 17
3.2.1.2 Acid Plume Piping 17
3.2.2 Sulfate Plume Containment and Extraction (Zone A) 19
3.2.2.1 Preliminary Evaluation Report 19
3.2.2.2 Drinking Water Source Protection (DWSP) Plans 20
3.2.2.3 Sulfate Well Construction 20
3.2.2.4 Sulfate Plume Piping and Routing 20
3.3 Groundwater Monitoring 20
3.3.1 Introduction 20
3.3.2 Purpose 23
3.3.3 Procedures 24
3.3.3.1 Methods 24
3.3.3.2 Data Management 24
3.3.3.3 Quality Control/Quality Assurance 24
3.3.4 Monitoring Plan 25
3.3.4.1 Water Levels 25
3.3.5 Water Chemistry 28
3.3.5.1 Coordination with Existing Programs 28
3.3.5.2 Analytical Suite 28
3.3.5.3 Monitoring Locations 31
3.3.5.4 Sampling Frequency 31
3.3.6 Analysis and Results 34
3.4 Water Treatment and Delivery System for Treated Waters and Concentrates 34
3.4.1 Introduction 34
3.4.2 Design Criteria 36
3.4.3 Project Delivery Strategy 36
3.4.4 Results of Demonstration Plant Operation 39
3.4.4.1 Process Description 39

3.4.4.2 Production Data 39
3.4.5 Preliminary Design of the Zone A Reverse Osmosis Plant 42
3.4.5.1 Building 42
3.4.5.2 Process 45
3.4.6 Time Schedule 55
3.5 Management of Acidic Waters and RO Concentrates in KUCC Tailings Circuit 57
3.5.1 Overview of Water Management in Tailings Circuit 57
3.5.2 Operational Conditions 57
3.5.2.1 Performance Criteria 57
3.5.2.2 Project Delivery Strategy 58
3.5.2.3 Preliminary Drawings and Sketches 59
3.5.2.4 Results of Additional Field Sampling 59
3.5.2.5 Monitoring 66
3.5.3 Post-Mining Conditions 66
3.5.3.1 Performance Criteria 67
3.5.3.2 Project Delivery Strategy 67
3.5.3.3 Preliminary Drawings 67
4.0 PERMITS AND INSTITUTIONAL CONTROLS 67
4.1 New Permits 68
4.1.1 Drinking Water Permit(s) 68
4.1.2 County Conditional Use and Building Permits 68
4.1.3 Construction Permits 68
4.1.4 Well Drilling/Construction Permits 68
4.2 Permit Modifications 69
4.2.1 UPDES Permit No. UTD0000051 69
4.2.2 Air Emissions Permit 69
4.2.3 Division of Oil, Gas and Mining (DOGM) – Notice of Intent 69
4.3 Groundwater Use Restrictions 69
5.0 DESIGN QUALITY CONTROL 70
5.1 Criteria Committee Meetings 70
5.2 Design Checks 71
5.2.1 Preliminary Design Check 71
5.2.2 95 Percent Design Check 71
5.3 Operability Review 71
5.4 Construction Review 71
6.0 PROGRESS MEETINGS AND REPORTS 72
6.1 Quarterly Progress Meetings 72
6.2 Progress Reports 72
6.3 TRC Meetings 72
7.0 SCHEDULE FOR REMEDIAL DESIGN ACTIVITIES 72
7.1 Summary of Deliverables 72
7.2 Schedule 73
8.0 REFERENCES 77

LIST OF TABLES iii
LIST OF FIGURES iv

APPENDIX A
APPENDIX B

List of Tables

1-1	Summary of Failure Modes and Effects Analysis	7
2-1	South Facilities Technical Review Committee	13
3-1	Extraction Rates and Schedule for the Remedial Design	16
3-2	Wells for Water Level Monitoring	26
3-3	Preliminary Analytical Suite for Groundwater Samples	29
3-4	Location and Frequency for Groundwater Chemistry Monitoring	31
3-5	Demonstration Plant Production and Performance Data	37
3-6	Typical Sulfate Plume Water Analyses	43
3-7	Zone A RO Plant Building Dimensions	45
3-8	Zone A RO Feed Water Blending	48
3-9	Blending of RO Permeate with Filtered Feed Water	50
7-1	Summary of RD Phase Deliverables	74

List of Figures

1-1	Project Area Map	2
2-1	Project Organization	11
3-1	Zone A and Zone B Groundwater Plumes	15
3-2	Extraction Well Locations	16
3-3	Typical Acid Extraction Well Design	18
3-4	Typical Sulfate Extraction Well Design	21
3-5	Pipeline Design and Routing	22
3-6	RD Water Level Monitoring Locations	27
3-7	RD Water Chemistry Monitoring Locations	35
3-8	Zone A RO Plant General Arrangement	38
3-9	Demonstration Plant Block Diagram	40
3-10	Demonstration Plant Membrane Array	41
3-11	Zone A Ro Plant Site Plan	44
3-12	Zone A RO Plant Building Layout	46
3-13	Zone A RO Plant Process Flow Diagram	47
3-14	Zone A RO Plant Membrane Array	52
3-15	Zone A RP Plant Vessel Rack General Arrangement	53
3-16	Zone A RO Plant Time Schedule	56
3-17	KUCC Process Water Circuit Schematic	60
3-18	KUCC pH Monitoring	61
3-19	KUCC Cl Monitoring	62
3-20	KUCC Ca Monitoring	63
3-21	KUCC SO_4 Monitoring	64
3-22	KUCC Metals Monitoring	65
7-1	RD/RA Schedule	75

1.0 *INTRODUCTION*

1.1 Purpose of Preliminary Design

Kennecott Utah Copper Corporation (KUCC) will prepare a Final Remedial Design to address groundwater contamination at KUCC's South Facilities in accordance with the U.S. Environmental Protection Agency's Record of Decision. The Final Remedial Design, which addresses the size, scope and character of the Remedial Action, will:

- describe the problems to be addressed;
- identify the technical requirements to complete a successful remedial action;
- establish performance-based criteria for the components of the remedy;
- report the results of design investigations and support activities needed to finalize engineering plan;
- present the engineering plans and specifications that implement the performance criteria;
- document monitoring programs that will be implemented during and following remedial actions;
- provide schedules for implementing the remedial action.

The ***Preliminary Design***, prepared as the initial engineering design document for the project, includes the following elements:

- performance and, as appropriate, design criteria;
- project delivery strategy;
- results to date of treatability studies and additional field sampling;
- preliminary plans, drawings and sketches;
- outline of required performance objectives and/or specifications;
- preliminary construction schedule.

1.2 Site Background and Summary of Site Conditions and Risks

1.2.1 Study Area

The southwest Jordan Valley (SWJV) extends from the KUCC waste rock disposal areas on the eastern edge of the Oquirrh Mountains to the Jordan River. The foothills of the Traverse Mountains bound it on the south; the northern boundary is at approximately 7800 South Street. Figure 1-1 shows the project area.

GREAT SALT LAKE

SALT LAKE CITY

15

80

MAGNA TAILINGS

2100 SOUTH

MAGNA

SMELTER

JORDAN VALLEY

WASATCH MTNS.

COPPERTON CONCENTRATOR

111

7800 SOUTH

48

9000 SOUTH

COPPERTON

TOOELE

BINGHAM CANYON

BINGHAM CANYON MINE

SOUTHWESTERN JORDAN VALLEY

OQUIRRH MOUNTAINS

TRAVERSE MOUNTAINS

TRAVERSE MTNS.

15

UTAH LAKE

N

Great Salt Lake

Bingham Canyon Mine

PROJECT AREA

FOR DETAILS OF THIS AREA
SEE FIGURE 3-1

GRA

SCALE:	NONE
DESIGNED BY	BV
DRAWN BY	MW
APPROVED BY	
APPROVED BY	
APPROVED BY	

M:\454\45410005 01/08/02 13:45 kmcook

1.2.2 Site Description

The Bingham Canyon mine is located on the western edge of the SWJV in the Oquirrh Mountains. The open-pit mine covers 1,900 acres and is over one-half mile deep. More than five billion tons of rock have been removed from the pit, resulting in the production of more than 15 million tons of copper and other metals. Waste rock from the mine is placed along the east, west and north sides of the pit, where it receives meteoric precipitation that results in some natural leaching. Prior to 2000, the waste rock was artificially leached with recycled acidic water. The active leaching circuit was phased out beginning in 1999 and finally discontinued on September 29, 2000.

1.2.3 Summary of Site Characteristics and Risks

This section summarizes the regional and site-specific geography, geology and hydrogeology as interpreted from previous site characterization studies. The site description and technical background of the problems are provided in very great detail in the Remedial Investigation (KUC, 1998a) and Feasibility Study (KUC, 1998b) and in the Remedial Design Work Plan (KUC, 2001a). For the Preliminary Design the background material will be significantly abbreviated so that the design elements themselves can be succinctly presented. The following material is adapted, much of it verbatim, from the EPA/UDEQ document "Southwestern Jordan Valley Groundwater Plumes Proposed Plan", issued in August 2000 in conjunction with public comment period on the proposed groundwater cleanup plan or the Record of Decision for the same project. Readers requiring more detail should consult the earlier technical documents that specifically describe the RI/FS programs.

There has been mining in the Oquirrh Mountains since the 1870s. Historical mining processes, including past operations of KUCC, resulted in groundwater contamination. Natural meteoric infiltration and pumped mine-waters reacted with sulfide-bearing waste rock to generate effluents that were high in total dissolved solids, including sulfate. In portions of the system, the waters were acidic and leached metals. In addition to generalized seepage, the Large Bingham Reservoir, the Old Evaporation Ponds, and other collection systems, built to contain such waters, leaked over many years. In the lower part of the valley, non-KUCC mining sources, such as irrigation canals and the ARCO tailings impoundment may also have contributed to elevated concentrations of some constituents.

As do intermittent and ephemeral surface waters, groundwaters flow from the Oquirrh Mountains toward the Jordan River. The flow of mine-impacted effluents in the ground-water flow system produced plumes of contaminated groundwater within the aquifer in the Southwestern Jordan Valley. The Remedial Investigation (KUC, 1998a) showed that there are about 171,000 acre-feet of groundwater that exceed appropriate water-quality criteria. The U.S. Environmental Protection Agency (EPA) and the Utah Department of Environmental Quality (DEQ) have determined that the ground-water plumes containing sulfate concentrations greater than 1500 mg/L sulfate or acid constitute a risk to human health and the environment that requires remedial actions.

The nature and extent of contamination of the groundwater depend on location:

- In Zone A, immediately down-gradient of the Bingham Reservoir and the waste-rock piles, the groundwater system includes an acidic plume, surrounded by a partially to fully neutralized zone of high-sulfate waters. Within the high-sulfate acidic plume, there are a variety of heavy metals in solutions at concentrations that exceed drinking-water standards, in some places by a factor of one hundred or more.

- In Zone B, located at and down-gradient from the old KUCC Evaporation Ponds, the ground-water contaminant of concern is sulfate, which is present in Zone B at concentrations less than 1,500 mg/L, but above the State Drinking-Water Secondary Standard of 250 mg/L.

Of major concern is the proximity of mining-affected groundwaters, especially Zone A, to municipal well fields of West Jordan and Riverton. Further off-site migration of contaminated groundwaters must be controlled in order to protect these public water-supply systems.

EPA, acting on data developed by KUCC in the Remedial Investigation, defined Remedial Action Objectives for corrective actions with respect to CERCLA in Zone A:

1. Minimize or remove the potential for human risk (by means of ingestion) by limiting exposure to groundwater containing chemicals of concern exceeding risk based concentrations or drinking water Maximum Contaminant Levels;
2. Minimize or remove the potential for environmental risk (by means of flow of groundwater to the Jordan River) to receptors of concern;
3. Contain the acid plume and keep it from expanding;
4. Remediate the aquifer over the long term.

Potential response actions were described and evaluated in the Feasibility Study (KUC, 1998b), which proposed a preferred remedy, discussed in Section 1.3 below.

In addition to the CERCLA response for Zone A that is the principal focus of this Remedial Design, KUCC is coordinating its Zone A activities with remedial actions in Zone B that are intended to resolve Natural Resource Damage Claim issues in the Zone B plume. Both agencies (EPA and UDEQ) and also KUCC understand that the cleanup of the two zones is linked by the historical nexus of origins of the plumes and by the hydrogeology of the groundwater flow systems. The principal objective of the Natural Resource Damage Claim – to "restore, replace or acquire the equivalent" of the damaged ground-water resource - is addressed in a separate settlement between the State of Utah, acting through its Natural Resource Trustee, and Kennecott. Portions of that settlement that overlap the scope of the CERCLA remedial action include:

1. Completing the CERCLA actions;
2. Extracting contaminated groundwater from the acid plume at a rolling average of 400 acre-feet per year to remove contaminant mass and contain the plume;

3. Completing identified source controls in order to comply with KUCC's ground-water discharge permit;
4. Creating a trust fund to be used to "restore, replace or acquire the equivalent" of the lost groundwater to the benefit of the public in the affected area.

1.3 Description of Selected CERCLA Remedy

To ensure compatibility, this section is taken verbatim from the U.S. Environmental Protection Agency's Record of Decision.

> "The selected remedy involves treatment and containment of contaminated groundwater plumes. The principal threats, which caused the groundwater contamination, have been addressed in previous actions or are contained under provisions of a Utah Groundwater Protection Permit.
>
> The selected remedy contains the following elements:
>
> - Continuation of source control measures as administered through the State of Utah Groundwater Protection Program.
>
> - Prevent human exposure to unacceptably high concentrations of hazardous substances and/or pollutants or contaminants by limiting access to the contaminated groundwater. Institutional controls include purchases of land, purchases of water rights, limiting drilling of new wells and increased pumping of nearby old wells as approved (on request) and administered through the State of Utah State Engineer (Division of Water Rights).
>
> - Prevent human exposure to unacceptably high concentrations of hazardous substances and/or pollutants or contaminants through point-of-use management which includes providing in-house treatment units to residents with impacted wells, replacement of their water by hooking the properties up to municipal drinking and/or secondary supplies, and/or modifying their wells to reach uncontaminated waters.
>
> - Contain the acid plume in Zone A by installation of barrier wells at the leading edge of the contamination (1500 ppm sulfate or less), pump and treat the waters to provide a hydraulic barrier to further plume movement while providing treated water for municipal use. The treatment technology for the barrier well waters is reverse osmosis.
>
> - Withdraw the heavily contaminated waters from the core of the acid plume in Zone A and treat these contaminated waters using pretreatment with nanofiltration or

equivalent technology, followed by treatment with reverse osmosis to provide drinking quality water for municipal use[1].

- Monitor the plume to follow the progress of natural attenuation for the portions of the Zone A plume which contain sulfate in excess of the state primary drinking water standard for sulfate (500 ppm sulfate).

- Disposal of treatment concentrates in existing pipeline used to slurry tailings to a tailings impoundment prior to mine closure.

- Development of a post-mine closure plan to handle treatment residuals for use when the mine and mill are no longer operating."

1.4 Overview of Implementation

1.4.1 Technical Approach

The selected remedy described in Section 1.3 will be organized into three functional units; 1) containment and extraction of contaminated groundwater, 2) treatment of sulfate contaminated water in the Zone A Reverse Osmosis (RO) facility to produce municipal quality water, and 3) neutralization of acidic groundwater in the tailings line using the naturally occurring neutralization potential of the tails (supplemental lime will be added to the tails if necessary). The purpose, scope and objectives for each of these functional units are detailed in Section 3.0.

1.4.2 Updated Failure Modes and Effects Analysis (FMEA)

As with most CERCLA actions, the RI/FS phase did not produce all the data needed for the Remedial Design. To determine the sorts of information needs that are most critical to successful performance of the selected remedy, KUCC consulted its design team to identify gaps in support information and underlying data. In addition, KUCC elected to use a style of engineering risk assessment called "Failure Modes and Effects Analysis" (FMEA). FMEA is a qualitative evaluation that uses experienced specialists to describe an engineered system in terms of its critical components. Using this description of the system and its components, the specialists then systematically identify (a) ways in which adverse effects could arise; (b) the severity of the consequence(s) of those effects; and (c) how the project could mitigate the adverse effects.

The FMEA process allows the project team to concentrate on the information needed to control risk in the components and the overall system. It provides a traceable rationale for the identification of data needs, and therefore for the studies and projects needed to resolve the remaining uncertainties. A preliminary FMEA evaluation was presented in the Remedial Design Work Plan (KUC, 2001). Current status of the FMEA for this project is summarized in Table 1-

[1] The RD elects to not implement nanofiltration technology as part of the treatment program. Rather, the acid groundwater will be neutralized in the tailings line (equivalent technology) and supplemented with lime if necessary. The reverse osmosis treatment system will be used to treat sulfate contaminated water to produce drinking water.

1, and the results of this evaluation were used to establish the Preliminary Design described in Section 3.0 below. The FMEA process will continue through the rest of the Remedial Design process to complete the design investigations and design-support activities to a level of detail necessary and sufficient to support the Final Design.

Table 1-1. ***Summary of Failure Modes and Effects Analysis***

FAILURE MODE	ADVERSE EFFECT	RANK OF CONSEQUENCE	POSSIBLE MITIGATION
Groundwater Collection and Containment System			
Well Casing Fails Above Plume	1. Acidic or high-SO4 water flows to vadose zone and re-infiltrates 2. Extraction rate compromised	1. Low: re-infiltration local to existing plume 2. Low to Moderate, depending on amount of flow lost	1. Plug and redrill well 2. Sleeve well
Extraction rate does not contain plume	1. Plume is not contained: water quality degrades downgradient	1. High to Extreme	1. Reconfigure pumping 2. Increase extraction rates 3. Install and pump additional wells 4. Add injection wells to improve containment
Extraction rate creates overdraft on aquifer	1. Rate of water-level decline exceeds State Engineer's guidelines	1. Moderate (e.g., adjust pumping rates) to severe (e.g., adverse impacts to water rights or ground subsidence)	1. Monitor water levels against predictions and adjust pumping as necessary; 2. Respond to direction from State Engineer 3. Add injection wells to improve containment
Delivery pipeline fails	1. Contaminated water spills to surface 2. Delivery rate to water treatment (RO units) is compromised	1. Low and local if quickly contained. Could be moderate to high if unidentified for long period 2. Low to moderate, depending on volume and period of interruption	1. Place pipelines above ground for inspection 2. Monitor flow rates and shut down flow automatically if rate falls out of acceptable range 3. Double-wall (or otherwise contain) pipelines 4. Leak detection in double-wall, with failsafe 5. Storage during repairs or shut down pumping 6. Shut down treatment facility until pipeline is repaired

FAILURE MODE	ADVERSE EFFECT	RANK OF CONSEQUENCE	POSSIBLE MITIGATION
Water Treatment (RO) and Hydraulic Delivery Systems			
Larger volumes than anticipated require treatment and distribution	1. Capacity must be increased 2. Rate of aquifer clean-up compromised	1. Low (technical) to moderate (cost) 2. Moderate to high, depending on scale of modification to schedule	1. Add additional treatment and/or delivery capacity 2. Add additional distribution capcity
Quality of extracted water degrades beyond requirements of RO feed water	1. Increased feed pressure 2. Lower permeate recovery and quality	1. Low (technical) to moderate (cost)	1. Blend with low-TDS water 2. Use nanofiltration or other pretreatment
Concentrate pipeline fails	1. Contaminated water spills to surface 2. Delivery rate to Copperton tailings line compromised	1. Low and local if quickly contained. Could be moderate to high if unidentified for long period 2. Low	1. Place pipelines above ground for inspection 2. Monitor flow rates and shut down flow automatically if rate falls out of acceptable range 3. Double-wall (or otherwise contain) pipelines 4. Provide temporary storage (e.g., Desilting Basin) while pipeline is repaired 5. Shut down treatment facilities until pipeline is repaired
Permeate pipeline fails	1. Clean water delivery interrupted 2. Regulatory impact for drinking water supplies	1. Low to moderate	1. Restore flow 2. Provide alternative fresh water through purchase or alternative source

FAILURE MODE	ADVERSE EFFECT	RANK OF CONSEQUENCE	POSSIBLE MITIGATION
Management of Acidic Flows & RO Concentrates in KUCC Tailings Circuit			
Mechanical failure of tailings pipeline	1. Contaminated water and solids spill to surface 2. Groundwater extraction and treatment rates compromised: 3. Copper production curtailed	1. Low and local if quickly contained: could be moderate to high if unidentified for long period 2. Low to high, depending on volume and period of interruption 3. Moderate to extreme, depending on length of curtailment	1. Inspect and maintain 2. Monitor flow rates and shut down flow automatically if rate falls out of acceptable range [Very difficult technically] 3. Store concentrates (e.g., in Desilting Basin) until tailings flow restored
Pipeline scale affects performance	1. Scale adversely affects pipeline performance or maintenance schedule	1. Low (technical) to moderate (cost)	1. Control scale by chemical management or physical removal
Design-basis lime (CaO) amendment does not adequately control chemistry in tails	1. Chemistry of decant pool exceeds discharge criteria 2. Chemistry of return flow exceeds processing criteria	1. Moderate if system recovers quickly; high if prolonged. 2. High to very high	1. Increase CaO dosage 2. Control discharge of WDPS, if a short-term problem 3. Treat decant pool, if a short-term problem 4. Adjust chemistry of process-water, if a short-term problem 5. Blend with gray water (or other waters) 6. Long-term mitigation through lime treatment / high-density sludge system
Metals and metalloids not irreversibly removed in tailings solids	1. Adverse water-quality impacts to discharge	1. Low (if reversibility is low) to very high	1. Control pH of pipeline system to a value that produces stable solids 2. Amend tailing (e.g., with limestone) to control pH in tailing.

FAILURE MODE	ADVERSE EFFECT	RANK OF CONSEQUENCE	POSSIBLE MITIGATION
Management of Acidic Flows and RO Concentrates in KUCC Tailings Circuit (continued.)			
Tailings acidified	1. Adverse water quality impacts to groundwater and surface water discharge 2. Adverse impacts to surface reclamation 3. Regulatory & permitting impacts	1. Moderate (if acidity, metals fluxes are low) to extreme	1. Add sufficient CaO (or other alkaline amendment)in tailing line to provide excess Net Neutralization Potential in tailing 2. Amend tailing in-situ (e.g., with limestone) to provide additional alkalinity in oxidation zone 3. Re-vegetate with resistant species; soil amendments to control phytotoxicity
Water quality not suitable for discharge to GSL at end of mining	1. Alternative for water and chemical management required	1. Moderate (if flow volumes and chemistry are moderate) to extreme	1. Evaporation with "RCRA" containment for solids 2. "Land application", if concentrations do not exceed regulatory limits

2.0 *PROJECT ORGANIZATION AND RESPONSIBILITIES*

The overall organization of the project team for the remedial design phase and its relationship to EPA and UDEQ oversight is shown in Figure 2-1. The specific responsibilities of each individual or group are discussed below.

2.1 KUCC Personnel

Mr. Jon Cherry, P.E., is the KUCC Project Manager and main point of contact for communications to and from KUCC. Mr. Cherry is designated as the Design Professional for this program. Mr. Cherry will be responsible for day-to-day communication with the EPA and UDEQ oversight as well as with contractors and consultants hired for specific tasks. His general responsibilities include implementation of a remedial design that will meet the performance criteria specified in the December 13, 2000 Record of Decision (ROD). As project manager, Mr. Cherry will define and clarify the scope of work and objectives for each major activity, and ensure the technical, budget, permitting and schedule requirements are met. Mr. Cherry is a registered professional engineer with over ten years of RCRA, CERCLA, SARA, and environmental permitting and compliance experience.

Mr. Bart Van Dyken is the KUCC Director of Engineering Services and will oversee the design, construction and operation of the extraction and treatment facilities. He will be responsible for coordinating the necessary resources to accomplish the design of the various elements and to

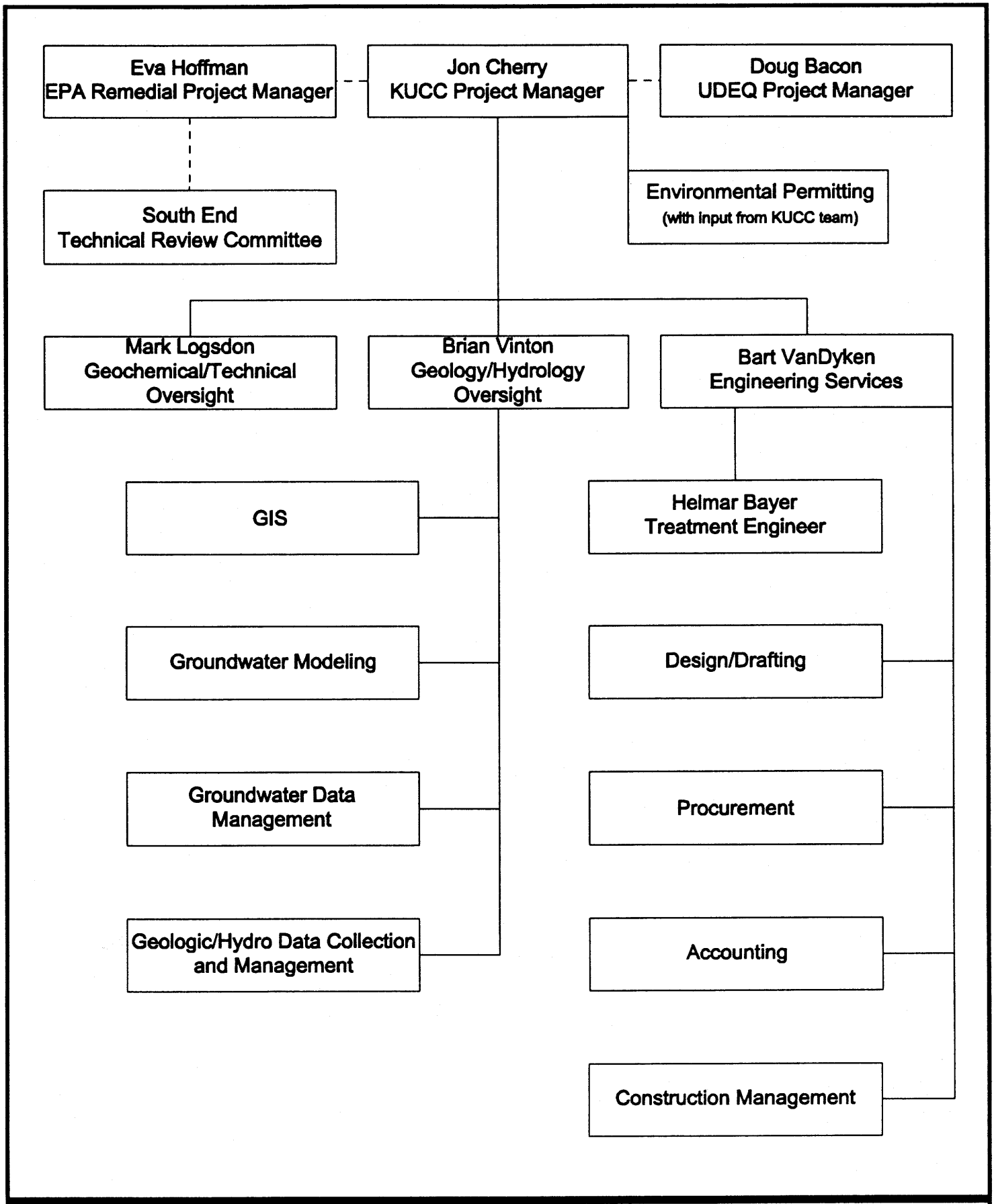

LEGEND	FIGURE 2-1	KUCC SOUTH FACILITIES RD
- - - - - - communication	Prepared by: JCC	
——— authority	Date: 1/10/02	PROJECT ORGANIZATION

complete the remedial design phase on schedule. Mr. Van Dyken and his staff will be responsible for the design, documentation, procurement, accounting and construction management of the containment/extraction wells, delivery of the extracted water to the membrane filtration treatment plant(s) and delivery of the treated waters and concentrate streams to water suppliers and the tailings line, respectively. Mr. Van Dyken has over 25 years of engineering experience in large-scale production and environmental remediation projects.

2.2 Consultants/Contractors

Mr. Helmar Bayer is the President of HBC International, Inc. and has contracted to KUCC for the past 10 years for treatability testing and design of the membrane treatment plant(s). Mr. Bayer will continue in this capacity, working directly with KUCC Engineering Services, to design, construct and operate the treatment facilities. Mr. Bayer holds aN M.S. in food and fermentation technology and has over ten years experience in wastewater treatment design.

Mr. Mark Logsdon is principal geochemist and President of Geochimica, Inc. and has contracted to KUCC to perform specific geochemical investigations related to the remedial design as well as provide other technical oversight throughout the remedial design process. Mr. Logsdon holds a M.S. in geology with specialization in geochemistry, has published numerous articles on specific geochemical issues and is a recognized expert in his field, with more than 25 years experience in mining-related geochemical studies.

Mr. Brian Vinton is President of North American Mine Services (NAMS). Mr. Vinton and his staff of engineers and technicians have contracted to KUCC over the past ten years for source removal/control projects and the RIFS. Mr. Vinton holds a B.S. in earth science and has over 20 years of experience in the exploration, mining and environmental remediation fields. NAMS is contracted to KUCC as part of the remedial design project to provide technical review, GIS support, groundwater modeling, groundwater data management and source control evaluation.

2.3 Government Oversight: EPA/UDEQ

Dr. Eva Hoffman is the Remedial Project Manager (RPM) from EPA Region VIII for the remedial design. Dr. Hoffman has been the EPA lead project manager for this project during the source removal/control projects and RIFS and will be responsible for coordination of all oversight for the project from EPA's perspective. She also will be responsible for contracting technical support and review from the U.S. Army Corps of Engineers and United State Geological Survey (USGS) to support her oversight role. Dr. Hoffman's responsibilities include ensuring that the remedial design will meet the performance criteria established in the ROD, that the public's interests are protected and that all federal administrative requirements are met.

Mr. Doug Bacon is the lead Project Manager from the State of Utah Department of Environmental Quality (UDEQ) for the remedial design phase of this project. Mr. Bacon was the lead project manager for UDEQ during the FS and ROD. Mr. Bacon will be responsible for coordination of all oversight for the project from UDEQ's perspective and ensuring that all State administrative requirements are met.

2.4 Technical Review Committee (TRC)

The TRC was formed during the initial stages of the RI and has continued through the FS and into the remedial design. The committee is comprised of representatives from KUCC, various federal, state and local government agencies, as well as, representatives from local municipalities and local residents. The TRC is co-chaired by the KUCC, EPA and UDEQ project managers. There are two purposes of the TRC. First, the TRC provides a forum in which the technical details and progress of the remedial design can be communicated in a transparent process that allows open dialog between the interested parties. The second purpose of the TRC is to provide technical review in their respective areas of expertise to ensure that basic assumptions are credible and that critical details are not overlooked. Table 2-1 is current listing of TRC members, their affiliation, phone number and email address.

Table 2-1. South Facilities Technical Review Committee

	NAME	AFFILIATION	PHONE NUMBER	EMAIL
1	Eva Hoffman	EPA	303-312-6764	Hoffman.eva@epamail.epa.gov
2	Helen Dawson	EPA	303-312-7841	Dawson.helen@epamail.epa.gov
3	Joy Emory	FOGSL	801-532-2771	joyemory@hotmail.com
4	Michelle Baguley	HRRR	801-254-4921	Mbaglady@hotmail.com
5	Richard Bay	JVWCD	801-565-8903	RichardB@jvwcd.org
6	Mark Atencio	JVWCD	801-565-8903	MarkA@jvwcd.org
7	Alan Packard	JVWCD	801-565-8903	alanp@jvwcd.org
8	Ivan Weber	KUCC	801-743-4617	Kiweber@Kennecott.com
9	Ryan Evans	KUCC	801-569-6961	Krevans@Kennecott.com
10	Paula Doughty	KUCC	801-569-7120	Doughtyp@Kennecott.com
11	Jon Cherry	KUCC	801-252-3126	Cherryj@Kennecott.com
12	Helmar Bayer	KUCC – HBC Int.	801-569-7301	Khbayer@Kennecott.com
13	Mark Logsdon	KUCC-Geochimica	805-640-8697	Mark.Logsdon@worldnet.att.net
14	Brian Vinton	KUCC-NAMS	801-569-7887	Kbvinton@Kennecott.com
15	Juliette Lucy	KUCC-NAMS	801-569-7585	kjlucy@kennecott.com
16	Mary Pat Buckman	SL Co. Health Dept.	801-313-6707	Mbuckman@eh.co.slc.ut.us
17	Steve Noble	South Jordan City	801-253-5230	Snoble@Sjordan.state.ut.us
18	Frank Roberts	UDEQ – DDW	801-536-0098	froberts@deq.state.ut.us
19	Brent Everett	UDEQ – DERR	801-536-4171	Beverett@deq.state.ut.us
20	Doug Bacon	UDEQ – DERR	801-536-4282	Dbacon@deq.state.ut.us
21	Doug Taylor	UDEQ – DSHW	801-538-6857	Dtaylor@deq.state.ut.us
22	Dennis Frederick	UDEQ – DWQ	801-538-6038	Dfrederick@deq.state.ut.us
23	Dan Hall	UDEQ – DWQ	801-538-9153	Dhall@deq.state.ut.us
24	Bill Moellmer	UDEQ – DWQ	801-538-6329	Wmoellme@deq.state.ut.us
25	Tom Munson	UDNR – DOGM	801-538-5321	Nrogm.tmunson@state.ut.us
26	Karl Kappe	UDNR – GSL	801 538-5273	Nrslf.kkappe@state.ut.us
27	Chuck Williamson	UDNR – Water Rights	801-538-7392	Nrwrt.cwilliam@state.ut.us
28	Jared Manning	UDNR – Water Rights	801-538-7455	Nrwrt.jmanning@state.ut.us
29	Mark Wichman	USACE - Omaha	402-221-4135	Mark.d.wichman@usace.army.mil
30	Bert Stolp	USGS	801-908-5061	Bjstolp@usgs.gov
31	Roger Payne	West Jordan City	801-569-5761	RogerP@Wjordan.com

(REVISED January, 28, 2002)

3.0 *PRELIMINARY DESIGN*

3.1 Purpose, Scope and Objectives of the Design

The purpose of the Remedial Design (RD) is to develop and document the technical requirements of the Remedial Action that will be executed by KUCC to resolve the CERCLA issues associated with contamination of groundwater from mining activities. The general nature of the selected remedy and an overview of the conceptual design for that remedy have been presented in Sections 1.3 and 1.4, above.

The scope of the Preliminary Design includes plans for three "functional units" of the conceptual plan:

- Groundwater containment and extraction system;
- Water treatment (RO) and hydraulic delivery system for treated water and concentrate
- Management of acid-plume water and Zone A RO concentrates in KUCC tailings circuit.

The RD will address processes and designs that will be used by KUCC to meet the terms of the ROD both during operational stages of the mine and after the end of mining. The level of detail for the operational phase is much greater than for the end-of-mining phase, as we expect that much will be learned during the period of expected operation that can be applied in the context of closure but which cannot be anticipated in detail at this time. The Final Design Report will include a Preliminary Design for the post-mining water management system.

This Preliminary Design provides the general plans and specifications for a performance-based Remedial Action that would be detailed and executed by KUCC or the selected contractor(s). Objectives of the Preliminary Design include:

- Identify performance and, as appropriate, design criteria for each "functional unit" of the conceptual design.
- Present the status of supplemental testing, sampling and analytical programs to address the remaining data needs
- Document the performance-based designs in preliminary plans and specifications.

The Preliminary Design is organized in terms of the three "functional units" discussed below.

3.2 Groundwater Containment and Extraction

Zone A groundwater will be extracted from acid and sulfate contaminant plumes. The acid plume contains low pH/high TDS water that will be extracted and routed to the tailings line via the Wastewater Disposal Pump Station (neutralization of the acid water is discussed in section 3.5). Sulfate water from Zone A will be routed to the RO Plant. The Zone B sulfate groundwater extraction and treatment plan will be implemented by other water purveyors (Figure 3.1).

OQUIRRH MOUNTAINS

Zone B

Zone A

TRAVERSE MOUNTAINS

STRATEGIC RESOURCES GR

SCALE: 1" = 6000'

DESIGNED BY	JKL
DRAWN BY	CDC
CHECKED BY	JKL
PROJECT ENGINEER	
PROJECT MANAGER	JFC

Extraction rates from the Zone A sulfate plume wells will be adjusted to accommodate the feed water requirements at the RO Plant and to produce the required 3500 acre-feet per year of drinking water. The 1500 mg/L sulfate will be contained on KUCC property by the pumping. If additional wells are needed to contain the sulfate plume on KUCC property, the average extraction rate would still be in the 2500 to 3500 gpm range with production of 3500 acre feet of drinking water per year. Table 3-2 lists the planned extraction rates and volume. Placement of these wells is shown below in Figure 3-2.

Table 3-2. Extraction Rates for Proposed Remedial Strategy.

Well *(For ID/location, see attached figures)*	**Model Layer***	**Pumping Rate (gpm)**	**Pumping Rate (as: ac-ft/yr)**	**Years**
Acid Well (ECG1146)	4	1250	*(2000)*	0-5
New Acid Well #1	4	1250	*(2000)*	0-30
New Acid Well #2	4	750	*(1200)*	6-15
New Acid Well #3	4	Varied †	*(Varied †)*	6-50
New Acid Well #4	4 (50%), 5 (50%)	Varied ††	*(Varied ††)*	16-50
BFG1200	4	~1100	*(1750)*	0-50
BFG1200	5	~1100	*(1750)*	0-50
BFG1200	6	~1100	*(1750)*	0-50
B2G1193	4	~1100	*(1750)*	0-50
B2G1193	5	~1100	*(1750)*	0-50
LTG1147	3 (50%), 4 (50%)	~1000	*(1600)*	0-50

* **Layer 3 is approximately 0 – 150 feet below the groundwater table**
Layer 4 is approximately 150 - 300 feet below the groundwater table
Layer 5 is approximately 300 – 450 feet below the groundwater table
Layer 6 is approximately 450 – 650 feet below the groundwater table

† **Varied Pumping: Years 6-30, 500 gpm (*800 afy*); Years 31-50, 1250 gpm (*2000 afy*)**

†† **Varied Pumping: Years 16-30, 750 gpm (*1200 afy*); Years 31-50, 1250 gpm (*2000 afy*)**

Figure 3-2 Extraction Well Locations

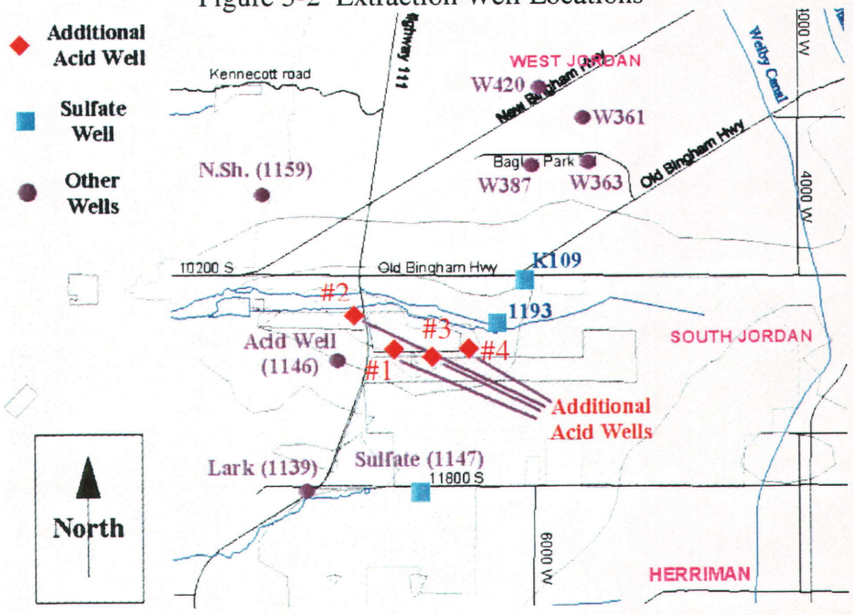

3.2.1 Acid Plume Containment and Extraction

Water from the acid wells will be routed to the tailings line via the Wastewater Disposal Pump Station. The current acid well, ECG1146, was installed in 1995 along with a pipeline delivery system to the Membrane Filtration Plant (Figure 3-2). A second acid well will be installed approximately ¼ mile east of Highway 111 and adjacent to and south of the Trans Jordan Landfill in late 2002 or early 2003. Additional acid wells will be installed in the future to contain the acid plume. They will be located where the maximum acid-water extraction is likely based on then-current groundwater monitoring and modeling results. The current (December, 2001) extraction rate for ECG1146 is 500 gpm, but a larger pump is scheduled to be installed before the end of 2002 which can extract up to 1500 gpm. Routing of flows after extraction is described in Section 3.2.1.2 below.

Optimal containment of the acid plume over the life of the project will be achieved by evaluating the monitoring data described in Section 3.3. KUCC will use its calibrated groundwater flow model as a planning tool for ongoing optimization of plume containment and groundwater extraction. The model will be calibrated periodically using data from ongoing monitoring. Extraction rates and well-field geometry will be set to contain the acid plume, to extract Zone A sulfate waters for treatment to drinking-water standards, and to balance the hydraulic response of the aquifer (drawdown) with the need to protect the ability of the aquifer to transmit the acid water to the wells.

3.2.1.1 Acid Well Construction

In addition to acid well ECG1146, other acid wells will be drilled and installed in the same manner (Kennecott RI 1998). Typical acid-well design will include an eighteen-inch nominal diameter stainless steel casing and screen (Figure 3-3). A submersible stainless steel pump will be installed. The well, pump, and appurtenances in contact with low pH water will be stainless steel and designed to withstand the water pumping pressure for each specific well. Screen intervals for all additional wells will include all portions of the aquifer identified during monitoring as containing low pH water.

3.2.1.2 Acid Plume Piping

All of the acid-well water will be piped through a 12-inch HDPE pipe encased in a 16-inch secondary HDPE containment pipe. The current pipeline was designed as such and includes approximately 7500 feet of line from ECG1146 to the Eastside Collection Reservoir (Figures 3-2 and 3-5). The second acid well line will include approximately 4700 feet of line from the planned well site to ECG1146. This line will have the same dimensions as the existing line to facilitate the possibility of maximum volume extraction in the eastern extent of the acid plume. The pipe will be designed to withstand the additional pressure due to its lower elevation location. Each of the respective acid wells will be designed with monitoring

TYPICAL ACID WELL DESIGN

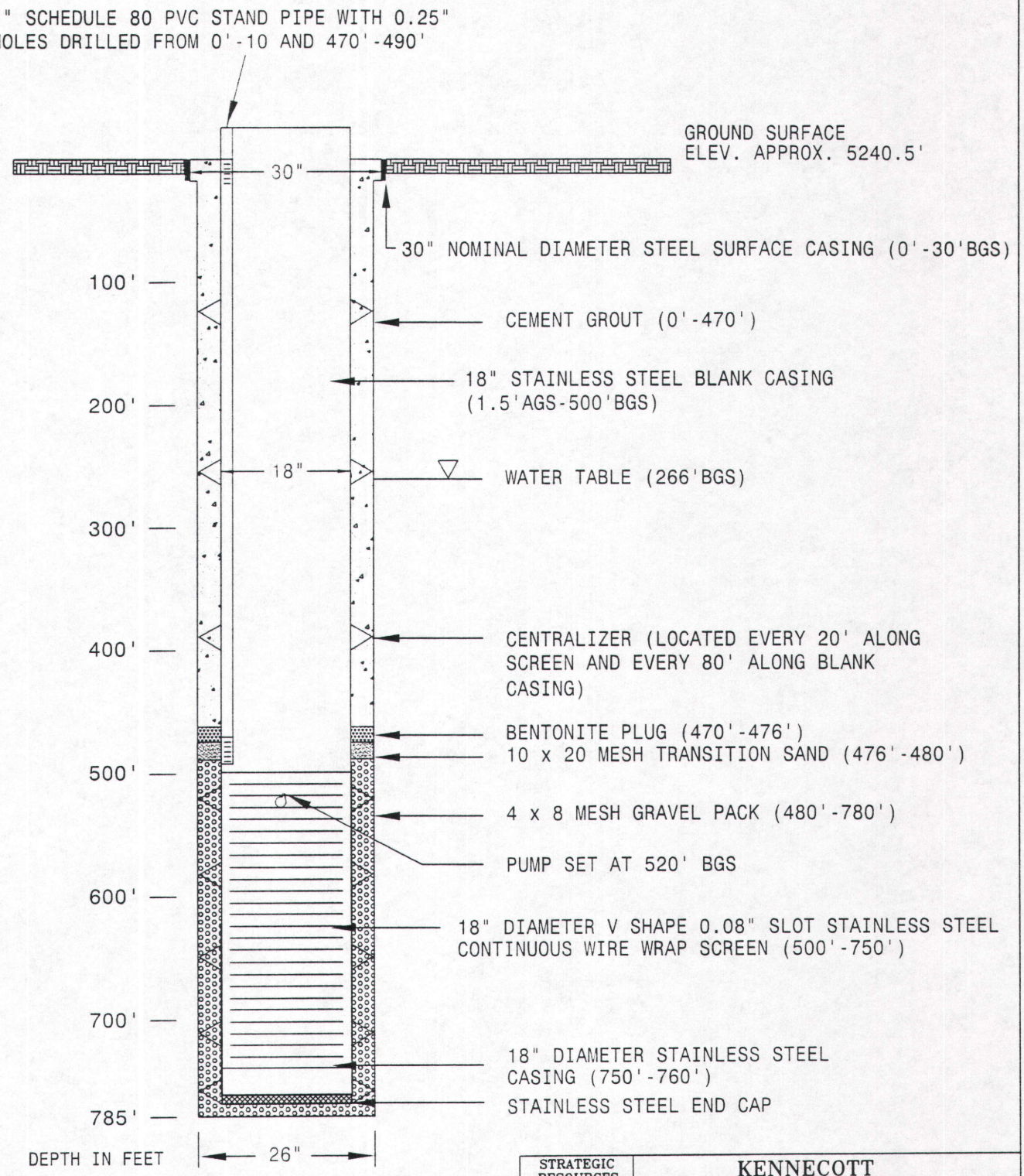

STRATEGIC RESOURCES GROUP		KENNECOTT UTAH COPPER
SCALE: NONE	DATE	FIGURE 3-3 ACID EXTRACTION WELL COMPLETION DIAGRAM
DESIGNED BY BV	12/19/01	
DRAWN BY MWC	12/19/01	
CHECKED BY BV	12/19/01	
PROJECT ENGINEER		
PROJECT MANAGER		

DRAWING # 41-F-0015

devices to ensure proper pump operation, flow metering and depth to water. These devices also will be programmed to shut down the well if any one parameter is not within the tolerance allowed. The secondary containment pipe also will be monitored at each of the down gradient well locations. If any flow is detected in the secondary pipe at any of the acid well sites by the continuous-reading conductance probes, the conductance signal will be conveyed to the electrical circuit at each of the wells, and each well will be programmed to shut down until the problem is identified and repaired.

The current pipeline will be routed to the cement-lined canal and/or the Precipitation Plant (P-Plant). Flow in the cement-lined canal will report to the Wastewater Disposal Pump Station which delivers water to the beginning of the tailings line. If the Wastewater Disposal Pump Station needs repair and down time is scheduled, the flow from the acid wells will either be shut down until repairs are complete or be diverted to the Bingham Reservoir. Flow to the P-Plant will either be pumped to evaporation ponds on the Eastside Waste Rock dumps during the summer months or routed to the Wastewater Disposal Pump Station or the Bingham Reservoir. The second acid well water pipeline will be tied into the pipeline at well ECG1146. Any additional pipelines from future acid wells will also be tied to the pipeline at well ECG1146. The existing pipeline from ECG1146 to the lower cement-lined canal has the capacity to carry up to 3000 gpm.

3.2.2 Sulfate-Plume Containment and Extraction (Zone A)

Water from the sulfate wells in Zone A will be routed to the RO plants as described in Section 3.4. The wells include LTG1147 (sulfate well), B2G1193 (K60) and BFG1200 (K109). Each of the three wells has existing conveyance lines which will be re-routed directly to the RO Plant. The flow from each well will be regulated by two objectives: (a) to contain the 1500 mg/L sulfate plume on KUCC property and (b) to provide a composite flow that will satisfy the water-quality and quantity requirements of the RO Plant. The current well-field configuration meets these requirements, based on the operations data for pilot-testing the RO plant over time since 1996. If monitoring and its evaluation through groundwater-flow modeling reveal that additional wells are needed to contain the Zone A sulfate plume, KUCC will develop and submit for approval plans and specifications that are similar to those for the existing well sites. The plan would include supporting monitoring data, drawdown modeling results, and water-quality predictions.

As part of Zone A sulfate containment, KUCC is also evaluating injecting water into a portion of the principal aquifer in the BFG1200/West Jordan Well Field area. Injection would provide additional hydraulic containment for the sulfate plume and also would recharge the overdraft of the Principal Aquifer that has developed from over-extraction during the last decade or more. Development of a feasibility plan for injection will be evaluated and recommendations completed in second quarter 2002.

3.2.2.1 Preliminary Evaluation Report

A Preliminary Evaluation Report (PER) on the feasibility and appropriateness of a particular groundwater source for use as a drinking water source is required under Utah Administrative

Codes R309-600, R655-4 and R309-204. A PER and the engineering specifications were submitted and approved by the Division of Drinking Water prior to completion of well BFG1200. Wells B2G1193 and LTG1147 were completed without a PER before details of the Remedial Design were worked out; however, both wells have been discussed with the State, and the State has asked that the information required in the PER be included in the Drinking Water Source Protection Plan for all of the sulfate wells. Any additional sulfate-extraction wells will follow the procedures as defined in the State regulations. All drilling and well construction materials will be in compliance with the regulations.

3.2.2.2 Drinking Water Source Protection (DWSP) Plans

All Zone A sulfate wells that are or will be routed to the RO Plant are required by the State to have approved DWSP plans. As agreed with the State, one plan will be completed that will include all three existing sulfate wells. This plan will be completed in the second quarter of 2002.

3.2.2.3 Sulfate Well Construction

Sulfate Well LTG1147 was installed in 1995 (Kennecott RI, 1998) and has been in operation through 2002. B2G1193 was installed in 1997, and BFG1200 was installed in 2000. The typical sulfate-well design includes an eighteen-inch nominal diameter stainless steel screen and a steel casing (Figure 3-4). Each well has a submersible pump capable of pumping a minimum of 1000 gpm and a maximum of 2000 gpm.

3.2.2.4 Sulfate Plume Piping and Routing

Pipeline design and routing can be viewed in Figure 3-5. Each of the lines from the well sites are designed to convey maximum flow from each well. Pipelines are installed per manufactures instructions.

3.3 Groundwater Monitoring

3.3.1 Introduction

As part of the Remedial Design/Remedial Action on the CERCLA groundwater plume in the Southwest Jordan Valley, KUCC will monitor the groundwater in and around the contaminant plume. In 2001, a Baseline Groundwater Chemistry and Water Level Study was conducted to create a representation of the shape and size of the Zone A contaminated groundwater plume at the start of remediation and to document the status of water level changes at the time in the valley. The frequency and intensity of long-term monitoring as discussed in this

TYPICAL SULFATE WELL DESIGN

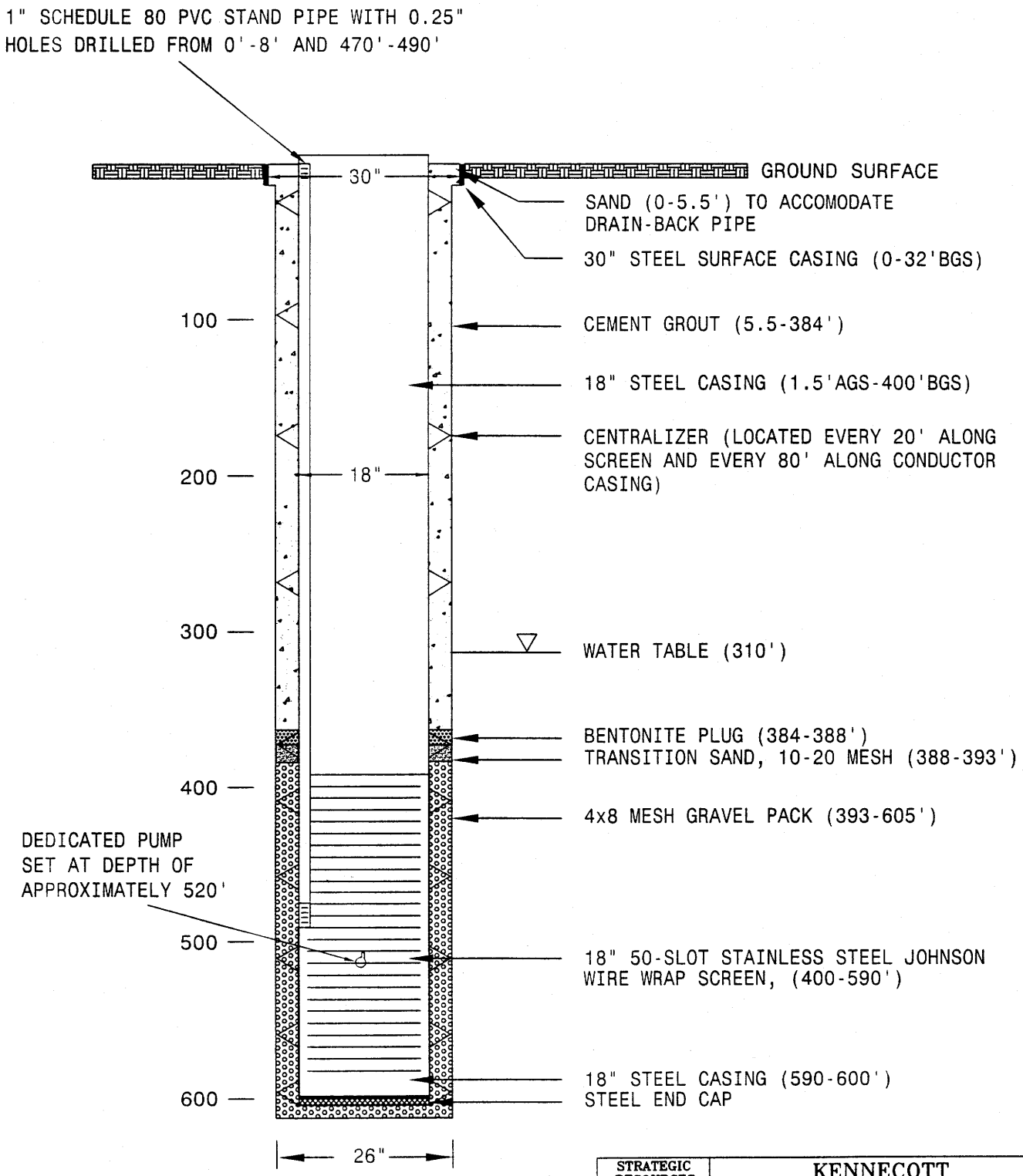

STRATEGIC RESOURCES GROUP		KENNECOTT UTAH COPPER
SCALE: NONE	DATE	FIGURE 3-4 SULFATE EXTRACTION WELL COMPLETION DIAGRAM
DESIGNED BY BV	12/19/01	
DRAWN BY MWC	12/19/01	
CHECKED BY BV	12/19/01	
PROJECT ENGINEER		
PROJECT MANAGER		

DWG # 451-F-0014

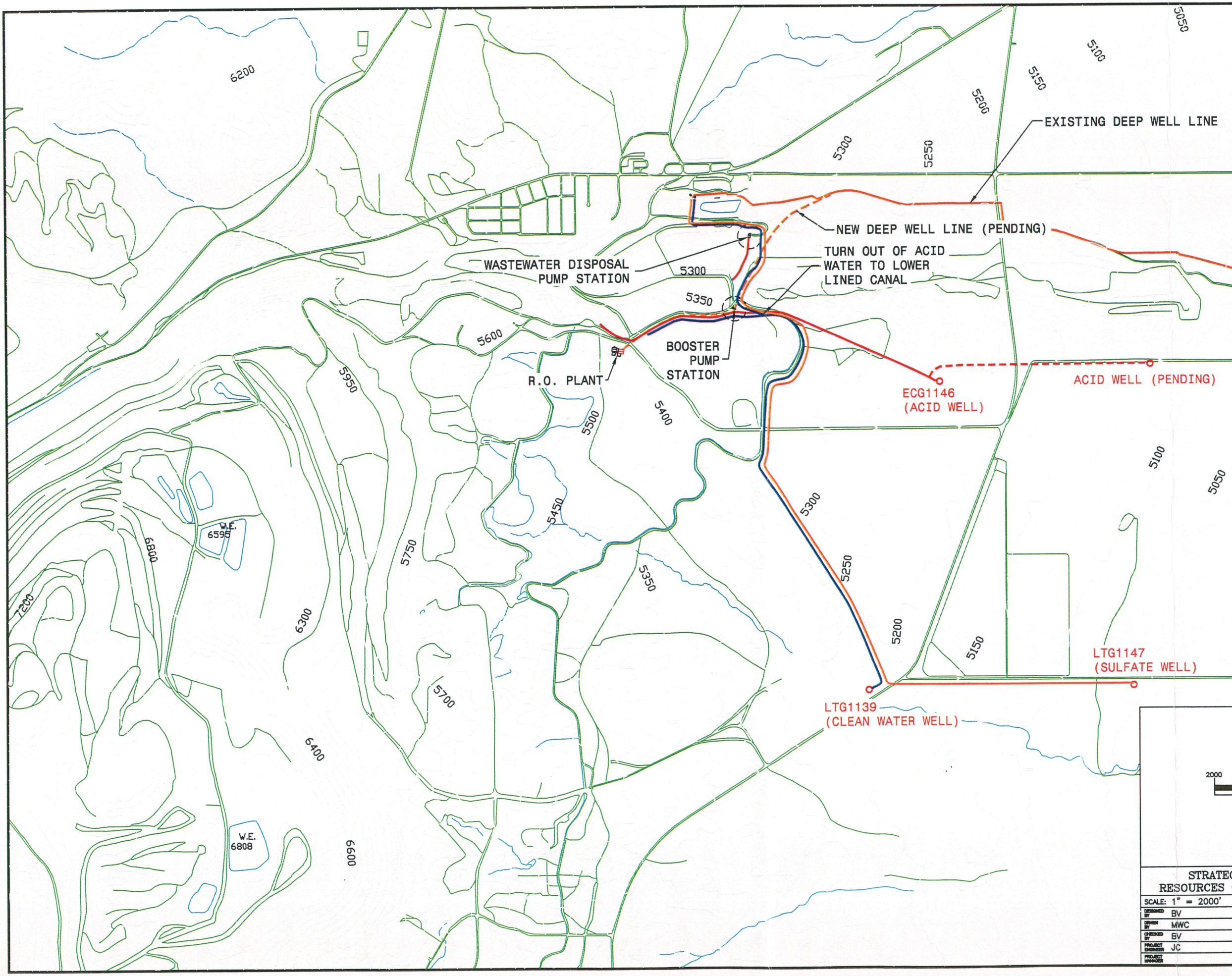
EXISTING DEEP WELL LINE
NEW DEEP WELL LINE (PENDING)
TURN OUT OF ACID WATER TO LOWER LINED CANAL
WASTEWATER DISPOSAL PUMP STATION
BOOSTER PUMP STATION
R.O. PLANT
ECG1146 (ACID WELL)
ACID WELL (PENDING)
LTG1147 (SULFATE WELL)
LTG1139 (CLEAN WATER WELL)
W.E. 6595
W.E. 6808
6200
5050
5100
5150
5200
5300
5250
5350
5600
5950
5500
5400
5450
6800
7200
6300
5750
5700
6400
6600
2000
STRATEG
RESOURCES
SCALE: 1" = 2000'
DESIGNED BY BV
DRAWN BY MWC
CHECKED BY BV
PROJECT ENGINEER JC
PROJECT MANAGER

section is based on the results of that Baseline study and previous Remedial Investigation results.

Future monitoring data will be compared to the baseline representation to evaluate the effectiveness of remediation and its impact on water levels and groundwater quality in the valley. Two types of data will be collected in the course of groundwater monitoring: water level elevation measurements (annual to monthly measurements on 332 wells) and groundwater chemistry from well sampling (25 different analytes on samples collected on a semiannual to every two year sampling frequency on samples from 100 wells). Annual monitoring reports completed as part of the Groundwater Characterization and Monitoring Plan will detail significant changes in the plume geometry and chemistry. These reports may include potentiometric maps, potentiometric-change maps, contaminant distribution maps and/or hydrogeologic cross sections. This monitoring plan will be a working plan with flexibility to increase or decrease groundwater monitoring intensity in response to changes seen in the plume.

3.3.2 Purpose

Groundwater monitoring data will be used for several purposes:

1. Monitor the impacts of remedial extraction and natural attenuation on the shape and size of the Zone A contaminant plume. Data will be compared to the pre-remediation (2001) representation of the shape and size of the contaminated groundwater plume created using Baseline Study data.

2. Monitoring results will be used to assure compliance with the stipulations of the Record of Decision for KUCC South Zone Groundwater Plumes (ROD) (EPA and UDEQ, 2000), that is, that groundwater with greater than 1500 mg/L sulfate and/or metals concentrations exceeding state and federal drinking water standards does not migrate outside the area of contamination defined in the Feasibility Study. The ROD also requires the natural attenuation of groundwater with greater than 500 mg/L sulfate be monitored.

3. The data will be added to the historical data set of water level and chemical trends. Some wells in the valley currently show falling water levels, reduced head pressure or contaminant migration. While remediation may exacerbate the head loss because of increased pumping rates, it will be necessary to distinguish trends that existed before remediation from those caused by remedial extraction so that KUCC can mitigate as necessary (i.e., overdrafting of the West Jordan well field).

4. Data gathered will be used in the on-going groundwater flow and transport models. Groundwater monitoring data will be used to identify where field conditions deviate from the model predictions, thereby allowing refinement of the models.

3.3.3 Procedures

3.3.3.1 Methods

KUCC's Groundwater Monitoring and Characterization Plan (GCMP) (KUCC 2000) and associated Standard Operating Procedures (SOPs) (KUCC 1999a) will be followed for all sampling and water level measurements. The GCMP has been approved by the Division of Water Quality and is updated on an annual basis. Procedures for documentation and sample handling, equipment maintenance and decontamination, quality control sampling, field measurements, and groundwater sampling are detailed in the SOPs.

3.3.3.2 Data Management

The GCMP specifies how field and laboratory data are managed from the point of collection, through sampling and laboratory handling, to reporting in quarterly and annual reports to the State of Utah Division of Water Quality. In addition to GCMP data management, the Data and Records Management Plan for the Remedial Design (KUCC 2001) provides more detail on how data will be managed on the project level and how they will be managed after all GCMP procedures are complete.

There may be certain types of data that do not go through the complete GCMP data-management procedure. We anticipate that all the site-wide water level measurements (those not collected immediately before well sampling) will be collected using GCMP water-level measurement protocol, but that these data will be entered into a project database instead of the GCMP database; therefore, they would not be included in GCMP quarterly and annual reports. These data will be reviewed by project personnel in a similar manner to the quality control review conducted under the GCMP program. The two data sets will be combined to evaluate the status of the contaminant plume.

3.3.3.3 Quality Control/Quality Assurance

Quality control procedures for the GCMP program will be followed for all RD data collection. These procedures are documented in the Quality Assurance Project Plan (QAPP) for the Groundwater Characterization and Monitoring Plan (KUCC 1999b). In addition to the extensive quality control/quality assurance performed according to laboratory and GCMP protocol, project personnel will review data by comparison to historical trends within 90 days of receipt of the data from the laboratory. If data outside the expected trend are identified, the measurement will be investigated. The expected trend will be defined as within plus or minus two standard deviations calculated on the previous eight sampling results for that analyte, or another appropriate statistical evaluation. Typically, a verification of field data collection and laboratory data reduction would be performed first, followed by re-analysis of the sample, if possible. If these actions do not resolve the issue, the well may be re-sampled. If re-analysis or re-sampling results are similar to the out-of-trend data, the data will stand. If these actions suggest the out-of-trend data may be an outlier, a qualifier will be placed in the database. Quality control problems,

necessary corrective actions, and effects on data will be documented in the final Baseline Study report and subsequent annual reports. Database management is outlined in more detail in the Data Records and Management Plan for the Remedial Design (KUCC, 2001).

3.3.4 Monitoring plan

3.3.4.1 Water Levels

Coordination with existing programs

Several existing water-level collection programs are underway in areas that overlap the South Facilities Groundwater plume area to be monitored. Data collected as part of these programs will also be used to evaluate hydraulic changes in and around the contaminant plume.

TransJordan Solid Waste Disposal Facility collects quarterly water levels on five monitoring wells located around their facility, approximately 1-2 miles west of the sulfate extraction area. KUCC has a good working relationship with the management of this facility, and we anticipate that their water-level information will be available; however, KUCC cannot control when water-level measurement occurs, and so the data may not be as useful for all purposes as would be data collected according to the KUCC schedule.

Frequency

For the first several years of remedial extraction, two complete sets of water levels per year will be collected on shallow completions of the wells identified in Figure 3-6. One set will be collected in May, before seasonal pumping begins, and the other set will be collected in September or October toward the end of the irrigation season but while large wells in surrounding communities are still pumping. The timing is designed to show the impact from seasonal pumping on the water table. Water levels will be collected on all depth completions annually to monitor vertical gradients. Under normal conditions, this amount of data should take about five working days to collect. Weather or ground conditions may prolong this interval up to about two weeks. All measurements will be made in as short a time span as possible.

More frequent water-level monitoring will be conducted around pumping wells when the extent of the cone of depression around those wells is being monitored.

Monitoring Locations

Table 3-2 lists the 332 wells proposed for water level monitoring. The wells include most KUCC monitoring wells and some private wells in Zone A. As seen on Figure 3-6, the spatial distribution of monitoring points is more concentrated in the two main areas of RD extraction (the acidic portion of the plume and the sulfate extraction area of wells B2G1193 and BFG1200), as it will be critical to understand the hydraulics of groundwater flow in these areas. Many of the sites are nested wells that will allow KUCC to monitor vertical hydraulic gradients.

Table 3-2. Wells for Water-level Monitoring

K26	P263	BRG919	B1G1120C	BSG1137A	BFG1156A	ECG1182A
K70	P264	BRG920	ECG1121A	BSG1137B	BFG1156B	ECG1182B
K72	P267B	BRG921	ECG1121B	BSG1137C	BFG1156C	ECG1183A
K84	P268	ECG922	ECG1121C	LTG1138A	BFG1156D	ECG1183B
K105	P269	ECG923	HMG1122A	LTG1138B	BFG1156E	ECG1184
K106	P270	ECG924	HMG1122B	LTG1138C	BFG1156F	ECG1186
K120	P271	ECG925	HMG1122C	LTG1139	B2G1157A	ECG1187
W131A	P272	ECG926	HMG1123A	LTG1140A	B2G1157B	ECG1188
P190A	P273	ECG928	HMG1123B	LTG1140B	B2G1157C	ECG1189
P190B	P274	LTG929A	HMG1123C	LTG1140C	BCG1158A	ECG1190
P191A	P277	LTG929B	ECG1124A	LTG1140D	BCG1158B	LTG1191
P191B	P279	ECG931	ECG1124B	ECG1142A	BCG1158C	B2G1193
P192A	BRG286	ECG932	ECG1124C	ECG1142B	EPG1165A	B2G1194A
P192B	BRG287	ECG934	BSG1125A	ECG1142C	EPG1165B	B2G1194B
P193A	BRG288	ECG935	BSG1125B	ECG1143A	EPG1165C	BFG1195A
P193B	BRG289	ECG936	BSG1125C	ECG1143B	EPG1166	BFG1195B
P194A	BRG290	ECG937	HMG1126A	ECG1143C	LTG1167A	BSG1196A
P194B	BRG291A	ECG938	HMG1126B	ECG1144A	LTG1167B	BSG1196B
P197B	ECG293	ECG939	HMG1126C	ECG1144B	LTG1167C	BSG1196C
K201	ECG294	ECG940	LTG1127A	ECG1144C	BFG1168A	B3G1197A
P208A	ECG296	SRG945	LTG1127B	ECG1145A	BFG1168B	B3G1197B
P208B	ECG297	SRG946	LTG1127C	ECG1145B	BFG1168C	B3G1197C
P209B	ECG299	B1G951	ECG1128A	ECG1145C	WJG1169A	BFG1198A
P211A	W403	ECG952	ECG1128B	ECG1146	WJG1169B	BFG1198B
P211B	ABC01	BRG999	ECG1128C	LTG1147	WJG1169C	BFG1198C
P212A	ABC02	ECG1113A	LTG1129A	BSG1148A	WJG1170A	ECG1199A
P212B	ABC04	ECG1113B	LTG1129B	BSG1148B	WJG1170B	ECG1199B
P214A	ABC04A	ECG1113C	LTG1129C	BSG1148C	WJG1170C	ECG1199C
P220	ABC05	ECG1114A	BSG1130A	BCG1149A	WJG1171A	ECG1199D
P225	ABC06	ECG1114B	BSG1130B	BCG1149B	WJG1171B	ECG1199E
P228	ABC07	ECG1115A	BSG1130C	BCG1149C	WJG1171C	ECG1199F
P231	ABC08	ECG1115B	ECG1131A	BCG1150A	COG1175A	ECG1199G
P239	ECG900	ECG1115C	ECG1131B	BCG1150B	COG1175B	BFG1200
P241A	ECG901	ECG1115D	ECG1131C	BCG1150C	COG1175C	EPG1689
P241B	ECG902	ECG1115E	BSG1132A	COG1151A	B2G1176A	HMG1856
P241C	ECG903	ECG1116A	BSG1132B	COG1151B	B2G1176B	WJG1980
P242	ECG904	ECG1116B	BSG1132C	COG1151C	B2G1176C	WJG1981
P243	ECG905	ECG1116C	BSG1133A	COG1151D	BSG1177A	WJG2453
P244A	ECG906	ECG1117A	BSG1133B	COG1152A	BSG1177B	
P244B	ECG907	ECG1117B	BSG1133C	COG1152B	BSG1177C	
P244C	ECG908	ECG1117C	HMG1134A	COG1152C	COG1178A	
P248A	ECG909	ECG1118A	HMG1134B	BSG1153A	COG1178B	
P248B	LRG910	ECG1118B	HMG1134C	BSG1153B	COG1178C	
P248C	LRG911	ECG1118C	BSG1135A	BSG1153C	BSG1179A	
P249A	LRG912	BSG1119A	BSG1135B	WJG1154A	BSG1179B	
P249B	LRG914	BSG1119B	BSG1135C	WJG1154B	BSG1179C	
P257	ECG915	BSG1119C	BFG1136A	WJG1154C	BSG1180A	
P260	ECG916	B1G1120A	BFG1136B	BFG1155B	BSG1180B	
P261	ECG917	B1G1120B	BFG1136C	BFG1155C	BSG1180C	

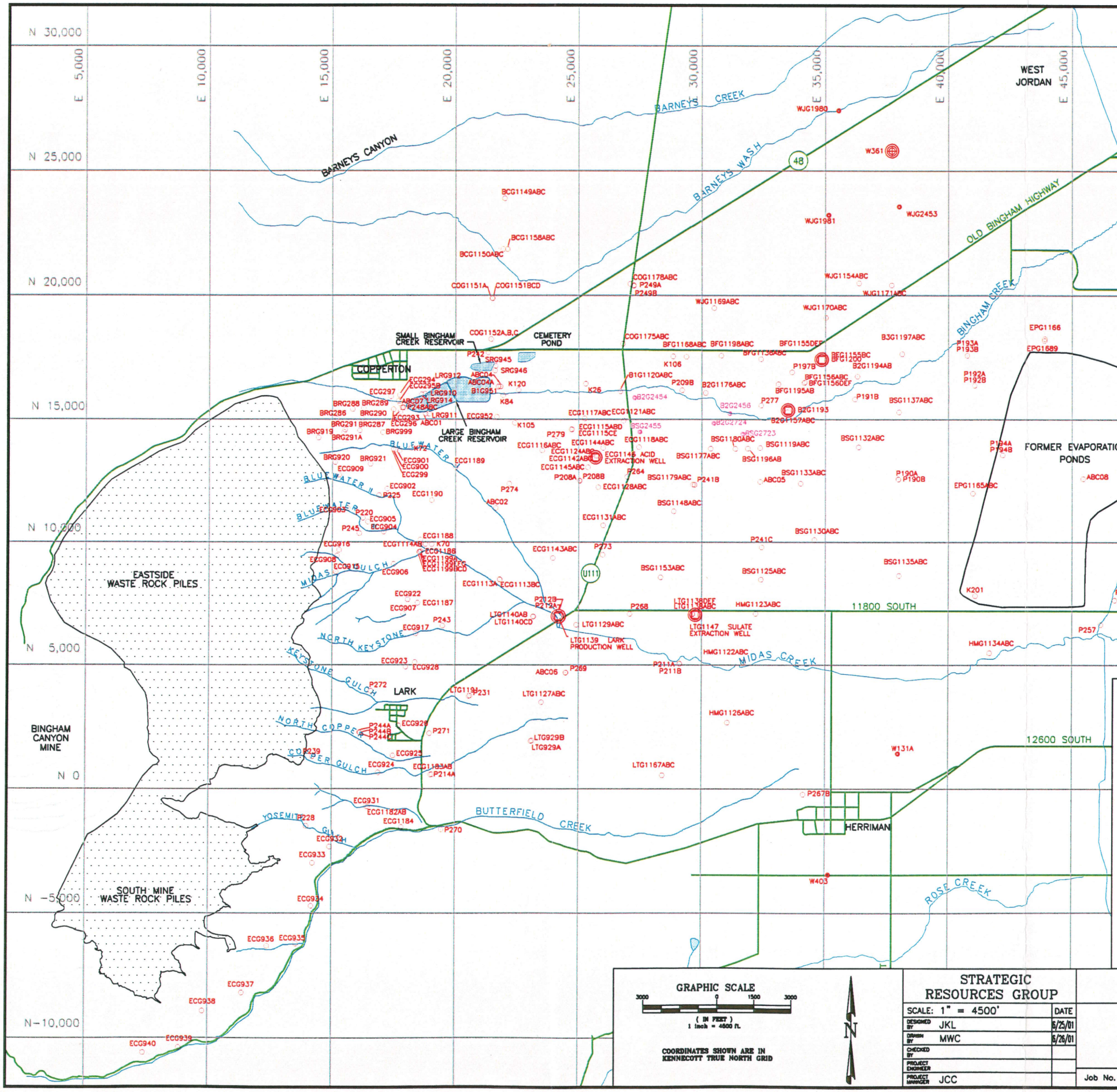

N 30,000
N 25,000
N 20,000
N 15,000
N 10,000
N 5,000
N 0
N -5,000
N-10,000
E 5,000
E 10,000
E 15,000
E 20,000
E 25,000
E 30,000
E 35,000
E 40,000
E 45,000
WEST JORDAN
BARNEYS CREEK
BARNEYS CANYON
BARNEYS WASH
48
OLD BINGHAM HIGHWAY
BINGHAM CREEK
SMALL BINGHAM CREEK RESERVOIR
CEMETERY POND
COPPERTON
LARGE BINGHAM CREEK RESERVOIR
BLUEWATER I
BLUEWATER II
BLUEWATER
MIDAS GULCH
NORTH KEYSTONE
KEYSTONE GULCH
NORTH COPPER
COPPER GULCH
YOSEMITE GULCH
BUTTERFIELD CREEK
ROSE CREEK
MIDAS CREEK
11800 SOUTH
12600 SOUTH
FORMER EVAPORATIO PONDS
EASTSIDE WASTE ROCK PILES
BINGHAM CANYON MINE
SOUTH MINE WASTE ROCK PILES
LARK
HERRIMAN
U111
LTG1139 LARK PRODUCTION WELL
LTG1147 SULATE EXTRACTION WELL
ECG1146 ACID EXTRACTION WELL
GRAPHIC SCALE
3000 0 1500 3000
(IN FEET)
1 inch = 4500 ft.
COORDINATES SHOWN ARE IN KENNECOTT TRUE NORTH GRID
N
STRATEGIC RESOURCES GROUP
SCALE: 1" = 4500'
DATE
DESIGNED BY JKL 6/25/01
DRAWN BY MWC 6/26/01
CHECKED BY
PROJECT ENGINEER
PROJECT MANAGER JCC
Job No.

3.3.5 Water Chemistry

3.3.5.1 Coordination with Existing Programs

Some of the wells selected for baseline water chemistry are routinely sampled as part of the GCMP, and many of the wells along the range-front near the Eastside Leach Collection System are sampled quarterly as part of the Bingham Canyon Mine and Leach Collection System Groundwater Discharge Permit. Data collected as part of these programs will be used to identify changes within the plume and surrounding groundwater.

TransJordan Solid Waste Disposal Facility also collects quarterly water samples on five monitoring wells located around their facility. Their water-quality information may be available; however, KUCC cannot control when sampling occurs or what elements are analyzed.

3.3.5.2 Analytical Suite

Samples will be analyzed for the parameters given in Table 3-3. The rationale for selecting these specific parameters is also listed in the table. The suite includes general water-quality parameters, major and minor analytes and trace metals. General parameters like pH, alkalinity/acidity, TDS and major analytes are needed for general chemistry and to calculate charge and mass balance to check the quality of the analyses. Some of the analytes listed in Table 3-3 were identified as being present in the Bingham Reservoir plume area at concentrations above baseline concentrations in an independent study done as part of the RI (Shepherd Miller, Inc., 1997, page 50). Sulfate, TDS, magnesium, cadmium, nickel and zinc were identified in that study as indicators of impacts related to mining activities.

Fluoride was found at elevated concentrations during baseline study sampling and therefore it will be analyzed during at least the first years of long-term monitoring. Selenium, lead and chromium were found at levels slightly greater than the respective drinking water standard and will stay on the analytical suite. Nitrate, silver an barium were not found at concentrations above the drinking water standards and, therefore, will not be analyzed on a regular basis.

The primary or secondary drinking-water standards and whether or not the analyte has a surface-water quality standard for the Jordan River (because groundwater from Zone B may discharge to the river) are given in Table 3-3. Also given are the analytical method(s) and target detection limits for each parameter as given in the QAPP. Analytical methods are selected by laboratory personnel to meet the target detection limits where possible. All analyses will be conducted according to test procedures specified under Utah Administrative Code R317-6-6.3.L for groundwater. KUCC Environmental Laboratory, a state-certified lab, will analyze samples.

Table 3-3. Analytical Suite for Groundwater Samples.							
Parameter	**T/D**	**Rational For Sampling**	**Primary Drinking H20 Std.**	**Secondary Drinking H20 Std.**	**Has Aquatic Std?**	**Analytical Method**	**Target Detect. Limit**
FIELD							
PH	-	general chemistry		6.5-8.5	Y	E 150.1	N/A
Temperature	-	general chemistry			Y	E 170.1	N/A
Conductance	-	general chemistry				E 120.1, Std 2510B	10 µmho
Depth to Water	-	indicator of hydraulic changes				N/A	0.01 ft
LABORATORY							
TDS	-	general chemistry, plume indicator	2000 mg/L*	500 mg/L	Y	E 160.1	10 mg/l
Chloride (Cl^-)	T	general chem., indicator of water source		250 mg/L		E 325.2	5 mg/l
Fluoride (F^-)	T	lack of baseline data, may occur at elevated levels	4 mg/L	2 mg/L		Std 4500F- E C/300.0	0.2 mg/l
Sulfate (SO_4^{2-})	T	plume indicator	1000 mg/L*	250 mg/L		E 375.2, 375.3, 9036	5 mg/l
Nitrate (NO_3-N)	T	has drinking water standard, to document low levels	10 mg/L		Y	E 353.2 0.	2 mg/l
Calcium (Ca)	T	general chemistry				E 200.7	1 mg/l
Magnesium (Mg)	T	plume indicator				E 200.7	1 mg/l
Potassium (K)	T	general chemistry				E 200.7	0.1 mg/l
Sodium (Na)	T	general chemistry				E 200.7	1 mg/l
Alkalinity (ALK)	-	general chemistry				Std 2320B, E 310.1	10 mg/l
Acidity (ACD)	-	general chemistry				Std 2310B	10 mg/L
Aluminum (Al)	TD	above background conc., needed for mineral acidity calculation		0.05 to 0.2 mg/L	Y	E 200.7, 200.8	200 µg/l
Arsenic (As)	TD	above background concentration	0.05 mg/L		Y	E 200.7, 200.8, 200.9, 6010B, 6020	5 µg/l
Barium (Ba)	TD	to document low levels	2 mg/L			E 200.7, 200.8, 200.9, 6010B, 6020	10 µg/l
Cadmium (Cd)	TD	plume indicator	0.005 mg/L		Y	E 200.7, 200.8, 200.9, 6010B, 6020	2 µg/l
Chromium (Cr)	TD	above background concentration	0.1 mg/L		Y	E 200.7, 200.8, 6010B, 6020	10 µg/l
Copper (Cu)	TD	above background concentration	1.3 mg/L	1 mg/L	Y	E 200.7, 200.8, 220.1, 6010B, 6020	20 µg/l

Table 3-3. Analytical Suite for Groundwater Samples.							
Parameter	**T/D**	**Rational For Sampling**	**Primary Drinking H20 Std.**	**Secondary Drinking H20 Std.**	**Has Aquatic Std?**	**Analytical Method**	**Target Detect. Limit**
Iron (Fe)	TD	plume indicator, needed for mineral acidity calculation		0.3 mg/L	Y	E 200.7, 236.1, 6010B	300 µg/l
Lead (Pb)	TD	above background concentration	0.015 mg/L		Y	E 239.1, 200.8, 200.9, 200.7, 6010B, 6020	5 µg/l
Manganese (Mn)	TD	plume indicator		0.05 mg/L		E 200.7, 243.1, 243.2, 200.8, 6010B, 6020	10 µg/l
Mercury (Hg)	T	to document low levels	0.002 mg/L		Y	E 245.1, 200.8	0.2 µg/l
Nickel (Ni)	TD	plume indicator	0.1 mg/L		Y	E 200.7, 200.8, 200.9, 6010B, 6020	30 µg/l
Selenium (Se)	TD	to document low levels	0.05 mg/L		Y	E 200.7, 200.8, 200.9, Mod7742, 6010B, 6020	3 µg/l
Silver (Ag)	TD	to document low levels		0.1 mg/L	Y	E 272.1, 272.2, 200.8, 200.9, 200.7, 6010B, 6020	1 µg/l
Zinc (Zn)	TD	plume indicator		5 mg/L	Y	E 289.1, 289.2, 200.7, 200.8, 200.9, 6010B, 6020	10 µg/l

NOTES: N/A = Not Applicable; E = EPA Method Number; Std = Standard Methods, 20th edition, method number. T/D = Total or Dissolved concentrations.
*If sulfate is >500 mg/L or TDS is > 1000 mg/L, it must be demonstrated that no better quality water is available.

3.3.5.3 Monitoring Locations

One-hundred wells have been selected for long-term water quality sampling. Wells were selected based on (a) their three-dimensional location in relationship to the acid and sulfate plumes and (b) their historical water-quality trends. The name, location, screen depth and rationale for sampling for each site are given in Table 3-4. Monitoring locations are denser in the acid plume and the sulfate extraction areas than in less contaminated areas because these are the areas that will be critical to monitor for changes during plume extraction (Figure 3-7). The margin of the sulfate plume between the sulfate extraction area and West Jordan's municipal well field also will be monitored densely. Other areas to be monitored include the Herriman area, around the clean water production well (well ID LTG1139) where clean water production is critical, and along the base of the Oquirrh Mountains where recharge to the alluvial aquifer occurs.

3.3.5.4 Sampling Frequency

The sampling frequency for each well listed in Table 3-4 is the minimum frequency at which these wells will be monitored in the beginning of the monitoring program. Some of the wells listed are sampled more frequently as part of existing monitoring programs, but the frequency listed is that which we think needs to be in place for the RD. For wells sampled more frequently than shown in Table 3-4, all additional data will be included in groundwater evaluation. Frequency may increase or decrease in subsequent years based on data gathered from this monitoring program. Recommendations for changes to the monitoring frequency, location or analytical suite will be included in annual reporting. After completion of the baseline monitoring report, the frequency and/or number of wells sampled will be reevaluated.

Sampling frequency was determined using several criteria: 1) wells near pumping centers will be sampled more frequently than areas more distant from pumping, 2) wells with historically more rapid or frequent water quality changes will be sampled more frequently than those with stable water quality, and 3) wells in areas where the degradation of water quality would be most serious (i.e. near drinking water wells; at the property boundary).

Table 3-4. Locations and Frequency for Groundwater Chemistry Monitoring

Site ID	Freq.	Sampling Rational	KUC northing	KUC easting	Screen Top	Screen Bottom
W22	A	Herriman water quality	-1534	23091	80	350
K26	A	source area (large reservoir)	16448	25287	204	224
K72	A	alluvium near recharge area	13841	18189	10	240
W107	2	property boundary	20440	43285	215	460
W189	A	property boundary	18943	39481	350	637
P190A	A	1500 mg/L SO4 contour, property boundary	12580	37968	286	296
P190B	2	1500 mg/L SO4 contour, property boundary	12570	37976	529	539
P193A	A	1500 mg/L SO4 contour, property boundary	17606	40766	224	234
P208A	A	acid plume margin	12512	25005	300	308
P208B	A	acid plume margin	12512	25036	401	412

Site ID	Freq.	Sampling Rational	KUC northing	KUC easting	Screen Top	Screen Bottom
P241B	A	acid plume margin	12351	29699	530	570
P241C	A	1500 mg/L SO4 contour, property boundary	9804	32427	385	405
P244A	A	alluvium near recharge area	2285	16110	37	47
P244B	A	bedrock recharge	2278	16123	63	73
P244C	A	bedrock recharge	2266	16139	107	127
P248A	A	alluvium near recharge area	15485	17875	80	100
P248B	A	bedrock recharge	15491	17849	120	140
P248C	A	bedrock recharge	15496	17828	175	195
P279	A	acid plume core	14156	24053	395	415
W361	A	West Jordan well field	25805	37702	225	620
W363	A	West Jordan well field	23509	37928	380	590
W387	A	West Jordan well field	23373	35197	379	690
W409	A	Herriman water quality	-4079	27132	140	505
LRG910	A	source area (large reservoir)	16038	18754	77	136
LRG911	A	source area (large reservoir)	15231	18914	77	136
LRG912	A	source area (large reservoir)	16539	19577	77	136
ECG917	A	alluvium near recharge area	6289	18385	150	190
ECG922	A	alluvium near recharge area	7677	18058	142	181
SRG946	A	source area (small reservoir)	16988	21598	120	179
B1G951	A	source area (large reservoir)	16322	21727	92	131
ECG1113A	A	clean water source area	8508	21783	138	178
ECG1115A	A	acid plume core	14603	24663	538	578
ECG1115B	A	acid plume core, base	14603	24663	838	858
ECG1115C	A	acid plume core, base	14601	24700	898	938
ECG1117A	A	acid plume core	15047	25243	438	478
ECG1117B	A	acid plume core, base	15047	25243	758	798
ECG1118A	A	acid plume core	13882	27446	598	638
ECG1118B	A	acid plume core, base	13882	27446	818	858
BSG1119B	A	acid plume, leading edge	13853	32358	538	558
B1G1120A	A	acid plume core	16141	26693	493	532
ECG1121A	A	acid plume core	14957	26824	600	640
BSG1125A	A	1500 mg/L SO4 contour, property boundary	8494	32397	280	320
HMG1126A	2	Herriman water quality	2682	31045	280	320
HMG1126B	2	Herriman water quality	2682	31045	380	420
ECG1128A	A	acid plume margin	12249	25795	418	458
BSG1130A	A	1500 mg/L SO4 contour	10114	34557	340	380
BSG1133A	A	1500 mg/L SO4 contour	12400	34000	390	410
BSG1133B	A	1500 mg/L SO4 contour	12400	34000	600	620
HMG1134A	A	Herriman water quality	5503	41670	160	180
BSG1137A	A	1500 mg/L SO4 contour	15300	38000	377	397
BSG1137B	A	1500 mg/L SO4 contour	15300	38000	637	657
LTG1139	A	clean water source area	6989	24166	330	980
LTG1140A	A	clean water source area	6984	23149	220	240
LTG1140B	A	clean water source area	6984	23149	330	350

Site ID	Freq.	Sampling Rational	KUC northing	KUC easting	Screen Top	Screen Bottom
ECG1144A	A	acid plume core	13855	26003	440	460
ECG1144B	2	acid plume core	13855	26003	560	580
ECG1145A	A	acid plume core	13049	25373	420	440
ECG1145B	A	acid plume core	13049	25373	760	780
ECG1145C	A	acid plume core. base	13049	25373	810	830
ECG1146	A	acid plume core	13467	25673	500	750
LTG1147	A	1500 mg/L SO4 contour	7067	29725	400	590
BSG1148A	A	acid plume margin	11276	28859	510	530
BSG1148B	2	acid plume margin	11276	28859	580	600
WJG1154A	S	SO4 extraction area. West Jordan well field	20510	36367	310	350
WJG1154B	A	SO4 extraction area. West Jordan well field	20510	36367	400	420
WJG1154C	A	SO4 extraction area. West Jordan well field	20510	36367	730	750
LTG1167B	2	Herriman water quality	553	28415	300	320
WJG1169A	A	1500 mg/L SO4 contour. West Jordan well field	19501	30501	400	420
WJG1169B	A	1500 mg/L SO4 contour. West Jordan well field	19501	30501	470	490
WJG1170A	A	SO4 extraction area. West Jordan well field	19110	35012	375	395
WJG1171A	S	SO4 extraction area. West Jordan well field	20426	37696	430	450
COG1175A	2	acid plume margin	18070	26823	390	410
COG1175B	A	acid plume margin	18070	26823	600	620
B2G1176A	A	acid plume margin	16148	30121	555	575
BSG1177A	A	acid plume margin	13826	30357	525	545
BSG1177B	A	acid plume margin	13826	30357	680	700
COG1178A	2	sulfate plume margin	20468	27158	390	400
BSG1179A	A	acid plume margin	12358	29633	440	460
BSG1179B	A	acid plume margin	12358	29633	685	705
BSG1179C	A	acid plume margin	12358	29633	805	825
BSG1180B	A	acid plume. leading edge	13817	31356	660	680
BSG1180C	A	acid plume. leading edge	13817	31356	798	818
ECG1183A	A	alluvial bedrock contact	579	18992	35	65
ECG1184	A	Butterfield Canyon alluvial recharge to Herriman	-1538	17816	60	80
ECG1186	A	alluvium near recharge area	9647	18578	36	136
ECG1187	A	alluvium near recharge area	7540	18458	54	164
ECG1188	A	alluvium near recharge area	10109	18567	38	118
ECG1189	A	alluvium near recharge area	13054	19990	205	265
ECG1190	A	alluvium near recharge area	11715	19026	118	198
LTG1191	A	alluvium near recharge area	3749	20549	20	100
B2G1193	S	SO4 extraction	15378	33485	451	881
BFG1195A	A	SO4 extraction area	16434	33104	558	578
BFG1195B	A	SO4 extraction area	16434	33104	679	699
BSG1196B	S	acid plume. leading edge	13825	31860	470	490
BSG1196C	A	acid plume. leading edge	13825	31860	650	670
B3G1197A	S	SO4 extraction area. West Jordan well field	17661	38129	340	360
B3G1197B	A	SO4 extraction area. West Jordan well field	17661	38129	460	480
BFG1198A	A	1500 mg/L SO4 contour. property boundary	17580	30793	400	420

Site ID	Freq.	Sampling Rational	KUC northing	KUC easting	Screen Top	Screen Bottom
BFG1200	S	SO4 extraction	17570	34841	420	800
HMG1856	2	Herriman water quality	657	33611	200	280

3.3.6 Analysis and Results

Data will be compiled into data sets and analyzed by project personnel. Analysis may include the application of statistical methods and computer-software contouring programs. Results of long-term groundwater monitoring will be reported in the annual report for the GCMP. Figures to illustrate the status of the contaminant plume may include iso-concentration contour maps of sulfate, pH, and selected trace metals and potentiometric maps. Also included will be an analysis of changes in vertical hydraulic gradients, if any, and the status of water level changes in the Southwestern Jordan Valley. Hydrogeologic cross-sections depicting water quality may be used to show the vertical distribution of groundwater contamination.

3.4 Water Treatment and Delivery System for Treated Waters and Concentrates

3.4.1 Introduction

From 1995 through 1997, KUCC conducted a Remedial Investigation / Feasibility Study (RI/FS) of mining-related groundwater contamination in the southwestern Jordan Valley. As part of this work, KUCC studied various technologies for treating contaminated groundwater. One of the treatment technologies investigated by KUCC was membrane filtration (MF). During the last ten years, membrane filtration, especially reverse osmosis (RO), has become an established water treatment process. However, limited experience was available concerning the application of this technology for waters with elevated total dissolved solids (TDS) contents and calcium sulfate concentrations approaching saturation.

In 1995, a bench and pilot scale test program was started, which led to the purchase of a small-scale RO system (capacity 800 gallons per day). This system was installed at the South End Engineering Services offices near Copperton and has been in use since then. The unit provided the opportunity to gain first-hand experience with RO filtration of sulfate plume water, in addition to producing low conductivity water for the laboratory. In 1996, KUCC successfully pilot tested RO systems at the Garfield Well # 5 with feed water TDS at 5,000 ppm (sulfate 530 ppm). In 1999, KUCC modified the design of its nanofiltration plant for leach water and acid plume water. As a result, nine pressure vessels (with six membranes each) of the former stage two of the nanofiltration skid became available for demonstration-scale testing of sulfate plume water treatment. These vessels were arranged in a two-stage configuration, six vessels in first stage, and three vessels in second stage. High-pressure feed pump, prefiltration, and antiscalant dosing were added, and the demonstration unit was started up in July 1999 with water from the deep wells B2G1193 (K60) and BFG1200 (K109) being fed to the plant by submersible pump

STRAT
RESOURCE

SCALE: 1" = 4500

DESIGNED BY	JKL
DRAWN BY	MWC
CHECKED BY	JKL
PROJECT ENGINEER	
PROJECT MANAGER	JCC

GRAPHIC SCALE
(IN FEET)
1 inch = 4500 ft.
3000 0 1500 3000

COORDINATES SHOWN ARE IN
KENNECOTT TRUE NORTH GRID

N

N -10,000
N -5000
N 0
N 5,000
N 10,000
N 15,000
N 20,000
N 25,000
N 30,000
E 40,000
E 35,000
E 30,000
E 25,000
E 20,000
E 15,000
E 10,000
E 5,000

SOUTH MINE
WASTE ROCK PILES
BINGHAM
CANYON
MINE
EASTSIDE
WASTE ROCK PILES
HERRIMAN
BUTTERFIELD CREEK
ROSE CREEK
YOSEMITE GULCH
COPPER GULCH
NORTH KEYSTONE GULCH
KEYSTONE GULCH
LARK
MIDAS GULCH
MIDAS CREEK
BLUEWATER
BLUEWATER II
LARGE BINGHAM CREEK RESERVOIR
SMALL BINGHAM CREEK RESERVOIR
CEMETERY POND
COPPERTON
BINGHAM CR
OLD BIN
BARNEYS WASH
BARNEYS CREEK
BARNEYS CANYON
11800 SOUTH
LTG11147 SULFATE EXTRACTION WELL
LTG11139 LARK PRODUCTION WELL
ECG11146 ACID EXTRACTION WELL
W409
W22 @
W189
W363
W387
W361
48
U111
K72
K28
P279
P190A
P190B
P241C
P241B
P208A
P208B
P241A
P241C
LTG11678
LTG11191
LTG11404B
ECG11254
ECG11834
ECG11190
ECG11189
ECG11188
ECG11187
ECG11134
ECG11214
ECG11214A
ECG11214B
ECG11214AB
ECG11214AC
ECG11214ABC
ECG11214ABD
ECG11214ABE
ECG11214ABF
ECG11214ABG
ECG11214ABH
ECG11214ABI
ECG11214ABJ
ECG11214ABK
ECG11214ABL
ECG11214ABM
ECG11214ABN
ECG11214ABO
ECG11214ABP
ECG11214ABQ
ECG11214ABR
ECG11214ABS
ECG11214ABT
ECG11214ABU
ECG11214ABV
ECG11214ABW
ECG11214ABX
ECG11214ABY
ECG11214ABZ
ECG11214AC
ECG11214AD
ECG11214AE
ECG11214AF
ECG11214AG
ECG11214AH
ECG11214AI
ECG11214AJ
ECG11214AK
ECG11214AL
ECG11214AM
ECG11214AN
ECG11214AO
ECG11214AP
ECG11214AQ
ECG11214AR
ECG11214AS
ECG11214AT
ECG11214AU
ECG11214AV
ECG11214AW
ECG11214AX
ECG11214AY
ECG11214AZ
ECG11214B
ECG11214BA
ECG11214BB
ECG11214BC
ECG11214BD
ECG11214BE
ECG11214BF
ECG11214BG
ECG11214BH
ECG11214BI
ECG11214BJ
ECG11214BK
ECG11214BL
ECG11214BM
ECG11214BN
ECG11214BO
ECG11214BP
ECG11214BQ
ECG11214BR
ECG11214BS
ECG11214BT
ECG11214BU
ECG11214BV
ECG11214BW
ECG11214BX
ECG11214BY
ECG11214BZ
ECG11214C
ECG11214CA
ECG11214CB
ECG11214CC
ECG11214CD
ECG11214CE
ECG11214CF
ECG11214CG
ECG11214CH
ECG11214CI
ECG11214CJ
ECG11214CK
ECG11214CL
ECG11214CM
ECG11214CN
ECG11214CO
ECG11214CP
ECG11214CQ
ECG11214CR
ECG11214CS
ECG11214CT
ECG11214CU
ECG11214CV
ECG11214CW
ECG11214CX
ECG11214CY
ECG11214CZ
ECG11214D
ECG11214DA
ECG11214DB
ECG11214DC
ECG11214DD
ECG11214DE
ECG11214DF
ECG11214DG
ECG11214DH
ECG11214DI
ECG11214DJ
ECG11214DK
ECG11214DL
ECG11214DM
ECG11214DN
ECG11214DO
ECG11214DP
ECG11214DQ
ECG11214DR
ECG11214DS
ECG11214DT
ECG11214DU
ECG11214DV
ECG11214DW
ECG11214DX
ECG11214DY
ECG11214DZ
ECG11214E
ECG11214EA
ECG11214EB
ECG11214EC
ECG11214ED
ECG11214EE
ECG11214EF
ECG11214EG
ECG11214EH
ECG11214EI
ECG11214EJ
ECG11214EK
ECG11214EL
ECG11214EM
ECG11214EN
ECG11214EO
ECG11214EP
ECG11214EQ
ECG11214ER
ECG11214ES
ECG11214ET
ECG11214EU
ECG11214EV
ECG11214EW
ECG11214EX
ECG11214EY
ECG11214EZ
ECG11214F
ECG11214FA
ECG11214FB
ECG11214FC
ECG11214FD
ECG11214FE
ECG11214FF
ECG11214FG
ECG11214FH
ECG11214FI
ECG11214FJ
ECG11214FK
ECG11214FL
ECG11214FM
ECG11214FN
ECG11214FO
ECG11214FP
ECG11214FQ
ECG11214FR
ECG11214FS
ECG11214FT
ECG11214FU
ECG11214FV
ECG11214FW
ECG11214FX
ECG11214FY
ECG11214FZ
ECG11214G
ECG11214GA
ECG11214GB
ECG11214GC
ECG11214GD
ECG11214GE
ECG11214GF
ECG11214GG
ECG11214GH
ECG11214GI
ECG11214GJ
ECG11214GK
ECG11214GL
ECG11214GM
ECG11214GN
ECG11214GO
ECG11214GP
ECG11214GQ
ECG11214GR
ECG11214GS
ECG11214GT
ECG11214GU
ECG11214GV
ECG11214GW
ECG11214GX
ECG11214GY
ECG11214GZ
ECG11214H
ECG11214HA
ECG11214HB
ECG11214HC
ECG11214HD
ECG11214HE
ECG11214HF
ECG11214HG
ECG11214HH
ECG11214HI
ECG11214HJ
ECG11214HK
ECG11214HL
ECG11214HM
ECG11214HN
ECG11214HO
ECG11214HP
ECG11214HQ
ECG11214HR
ECG11214HS
ECG11214HT
ECG11214HU
ECG11214HV
ECG11214HW
ECG11214HX
ECG11214HY
ECG11214HZ
ECG11214I
ECG11214IA
ECG11214IB
ECG11214IC
ECG11214ID
ECG11214IE
ECG11214IF
ECG11214IG
ECG11214IH
ECG11214II
ECG11214IJ
ECG11214IK
ECG11214IL
ECG11214IM
ECG11214IN
ECG11214IO
ECG11214IP
ECG11214IQ
ECG11214IR
ECG11214IS
ECG11214IT
ECG11214IU
ECG11214IV
ECG11214IW
ECG11214IX
ECG11214IY
ECG11214IZ
ECG11214J
ECG11214JA
ECG11214JB
ECG11214JC
ECG11214JD
ECG11214JE
ECG11214JF
ECG11214JG
ECG11214JH
ECG11214JI
ECG11214JJ
ECG11214JK
ECG11214JL
ECG11214JM
ECG11214JN
ECG11214JO
ECG11214JP
ECG11214JQ
ECG11214JR
ECG11214JS
ECG11214JT
ECG11214JU
ECG11214JV
ECG11214JW
ECG11214JX
ECG11214JY
ECG11214JZ
ECG11214K
ECG11214KA
ECG11214KB
ECG11214KC
ECG11214KD
ECG11214KE
ECG11214KF
ECG11214KG
ECG11214KH
ECG11214KI
ECG11214KJ
ECG11214KK
ECG11214KL
ECG11214KM
ECG11214KN
ECG11214KO
ECG11214KP
ECG11214KQ
ECG11214KR
ECG11214KS
ECG11214KT
ECG11214KU
ECG11214KV
ECG11214KW
ECG11214KX
ECG11214KY
ECG11214KZ
ECG11214L
ECG11214LA
ECG11214LB
ECG11214LC
ECG11214LD
ECG11214LE
ECG11214LF
ECG11214LG
ECG11214LH
ECG11214LI
ECG11214LJ
ECG11214LK
ECG11214LL
ECG11214LM
ECG11214LN
ECG11214LO
ECG11214LP
ECG11214LQ
ECG11214LR
ECG11214LS
ECG11214LT
ECG11214LU
ECG11214LV
ECG11214LW
ECG11214LX
ECG11214LY
ECG11214LZ
ECG11214M
ECG11214MA
ECG11214MB
ECG11214MC
ECG11214MD
ECG11214ME
ECG11214MF
ECG11214MG
ECG11214MH
ECG11214MI
ECG11214MJ
ECG11214MK
ECG11214ML
ECG11214MM
ECG11214MN
ECG11214MO
ECG11214MP
ECG11214MQ
ECG11214MR
ECG11214MS
ECG11214MT
ECG11214MU
ECG11214MV
ECG11214MW
ECG11214MX
ECG11214MY
ECG11214MZ
ECG11214N
ECG11214NA
ECG11214NB
ECG11214NC
ECG11214ND
ECG11214NE
ECG11214NF
ECG11214NG
ECG11214NH
ECG11214NI
ECG11214NJ
ECG11214NK
ECG11214NL
ECG11214NM
ECG11214NN
ECG11214NO
ECG11214NP
ECG11214NQ
ECG11214NR
ECG11214NS
ECG11214NT
ECG11214NU
ECG11214NV
ECG11214NW
ECG11214NX
ECG11214NY
ECG11214NZ
ECG11214O
ECG11214OA
ECG11214OB
ECG11214OC
ECG11214OD
ECG11214OE
ECG11214OF
ECG11214OG
ECG11214OH
ECG11214OI
ECG11214OJ
ECG11214OK
ECG11214OL
ECG11214OM
ECG11214ON
ECG11214OO
ECG11214OP
ECG11214OQ
ECG11214OR
ECG11214OS
ECG11214OT
ECG11214OU
ECG11214OV
ECG11214OW
ECG11214OX
ECG11214OY
ECG11214OZ
ECG11214P
ECG11214PA
ECG11214PB
ECG11214PC
ECG11214PD
ECG11214PE
ECG11214PF
ECG11214PG
ECG11214PH
ECG11214PI
ECG11214PJ
ECG11214PK
ECG11214PL
ECG11214PM
ECG11214PN
ECG11214PO
ECG11214PP
ECG11214PQ
ECG11214PR
ECG11214PS
ECG11214PT
ECG11214PU
ECG11214PV
ECG11214PW
ECG11214PX
ECG11214PY
ECG11214PZ
ECG11214Q
ECG11214QA
ECG11214QB
ECG11214QC
ECG11214QD
ECG11214QE
ECG11214QF
ECG11214QG
ECG11214QH
ECG11214QI
ECG11214QJ
ECG11214QK
ECG11214QL
ECG11214QM
ECG11214QN
ECG11214QO
ECG11214QP
ECG11214QQ
ECG11214QR
ECG11214QS
ECG11214QT
ECG11214QU
ECG11214QV
ECG11214QW
ECG11214QX
ECG11214QY
ECG11214QZ
ECG11214R
ECG11214RA
ECG11214RB
ECG11214RC
ECG11214RD
ECG11214RE
ECG11214RF
ECG11214RG
ECG11214RH
ECG11214RI
ECG11214RJ
ECG11214RK
ECG11214RL
ECG11214RM
ECG11214RN
ECG11214RO
ECG11214RP
ECG11214RQ
ECG11214RR
ECG11214RS
ECG11214RT
ECG11214RU
ECG11214RV
ECG11214RW
ECG11214RX
ECG11214RY
ECG11214RZ
ECG11214S
ECG11214SA
ECG11214SB
ECG11214SC
ECG11214SD
ECG11214SE
ECG11214SF
ECG11214SG
ECG11214SH
ECG11214SI
ECG11214SJ
ECG11214SK
ECG11214SL
ECG11214SM
ECG11214SN
ECG11214SO
ECG11214SP
ECG11214SQ
ECG11214SR
ECG11214SS
ECG11214ST
ECG11214SU
ECG11214SV
ECG11214SW
ECG11214SX
ECG11214SY
ECG11214SZ
ECG11214T
ECG11214TA
ECG11214TB
ECG11214TC
ECG11214TD
ECG11214TE
ECG11214TF
ECG11214TG
ECG11214TH
ECG11214TI
ECG11214TJ
ECG11214TK
ECG11214TL
ECG11214TM
ECG11214TN
ECG11214TO
ECG11214TP
ECG11214TQ
ECG11214TR
ECG11214TS
ECG11214TT
ECG11214TU
ECG11214TV
ECG11214TW
ECG11214TX
ECG11214TY
ECG11214TZ
ECG11214U
ECG11214UA
ECG11214UB
ECG11214UC
ECG11214UD
ECG11214UE
ECG11214UF
ECG11214UG
ECG11214UH
ECG11214UI
ECG11214UJ
ECG11214UK
ECG11214UL
ECG11214UM
ECG11214UN
ECG11214UO
ECG11214UP
ECG11214UQ
ECG11214UR
ECG11214US
ECG11214UT
ECG11214UU
ECG11214UV
ECG11214UW
ECG11214UX
ECG11214UY
ECG11214UZ
ECG11214V
ECG11214VA
ECG11214VB
ECG11214VC
ECG11214VD
ECG11214VE
ECG11214VF
ECG11214VG
ECG11214VH
ECG11214VI
ECG11214VJ
ECG11214VK
ECG11214VL
ECG11214VM
ECG11214VN
ECG11214VO
ECG11214VP
ECG11214VQ
ECG11214VR
ECG11214VS
ECG11214VT
ECG11214VU
ECG11214VV
ECG11214VW
ECG11214VX
ECG11214VY
ECG11214VZ
ECG11214W
ECG11214WA
ECG11214WB
ECG11214WC
ECG11214WD
ECG11214WE
ECG11214WF
ECG11214WG
ECG11214WH
ECG11214WI
ECG11214WJ
ECG11214WK
ECG11214WL
ECG11214WM
ECG11214WN
ECG11214WO
ECG11214WP
ECG11214WQ
ECG11214WR
ECG11214WS
ECG11214WT
ECG11214WU
ECG11214WV
ECG11214WW
ECG11214WX
ECG11214WY
ECG11214WZ
ECG11214X
ECG11214XA
ECG11214XB
ECG11214XC
ECG11214XD
ECG11214XE
ECG11214XF
ECG11214XG
ECG11214XH
ECG11214XI
ECG11214XJ
ECG11214XK
ECG11214XL
ECG11214XM
ECG11214XN
ECG11214XO
ECG11214XP
ECG11214XQ
ECG11214XR
ECG11214XS
ECG11214XT
ECG11214XU
ECG11214XV
ECG11214XW
ECG11214XX
ECG11214XY
ECG11214XZ
ECG11214Y
ECG11214YA
ECG11214YB
ECG11214YC
ECG11214YD
ECG11214YE
ECG11214YF
ECG11214YG
ECG11214YH
ECG11214YI
ECG11214YJ
ECG11214YK
ECG11214YL
ECG11214YM
ECG11214YN
ECG11214YO
ECG11214YP
ECG11214YQ
ECG11214YR
ECG11214YS
ECG11214YT
ECG11214YU
ECG11214YV
ECG11214YW
ECG11214YX
ECG11214YY
ECG11214YZ
ECG11214Z
ECG11214ZA
ECG11214ZB
ECG11214ZC
ECG11214ZD
ECG11214ZE
ECG11214ZF
ECG11214ZG
ECG11214ZH
ECG11214ZI
ECG11214ZJ
ECG11214ZK
ECG11214ZL
ECG11214ZM
ECG11214ZN
ECG11214ZO
ECG11214ZP
ECG11214ZQ
ECG11214ZR
ECG11214ZS
ECG11214ZT
ECG11214ZU
ECG11214ZV
ECG11214ZW
ECG11214ZX
ECG11214ZY
ECG11214ZZ
ECG11215
ECG11216
ECG11217
ECG11218
ECG11219
ECG11220
ECG11221
ECG11222
ECG11223
ECG11224
ECG11225
ECG11226
ECG11227
ECG11228
ECG11229
ECG11230
ECG11231
ECG11232
ECG11233
ECG11234
ECG11235
ECG11236
ECG11237
ECG11238
ECG11239
ECG11240
ECG11241
ECG11242
ECG11243
ECG11244
ECG11245
ECG11246
ECG11247
ECG11248
ECG11249
ECG11250
ECG11251
ECG11252
ECG11253
ECG11254

from the Yosemite pump station. In the first year of operation, the original nanofiltration membranes were used. In May 2000, these membranes were replaced with RO membranes. The RO system has been in operation since then with feed rates of up to 312 gpm. The design of the Zone A Reverse Osmosis Plant presented in this document is based on the experience gained from this pilot and demonstration scale operation. Table 3-5 represents production and performance data associated with the demonstration RO Plant.

3.4.2 Design Criteria

The Zone A Reverse Osmosis Plant will be designed to produce 3,500 acft of treated water per year. The municipal quality product water will be delivered to the distribution system of the Jordan Valley Water Conservancy District (JVWCD). The membrane filtration concentrate from the Zone A Plant will be conveyed to KUCC's Wastewater Disposal Pump Station, from there it will be pumped to the tailings line for ultimate disposal into the Tailings Impoundment.

The site for building the Zone A plant (Figure 3-8 ref. Site Key Plan, Dwg. 456-M-0200) is adjacent to the existing nanofiltration plant. This is a central location for the various water sources to be processed at the plant, namely deep wells B2G1193 (K60), BFG1200 (K109), and the sulfate extraction well LTG1147.

3.4.3 Project Delivery Strategy

The project delivery strategy for the Zone A Reverse Osmosis Plant foresees three phases. In Phase 1, the first RO Skid with a feed water capacity of 1,500 gpm will be built and installed in the existing Membrane Filtration Plant. Existing pressure vessels, high-pressure pumps, and modified membrane wash system will be used in Phase 1. The pipeline to deliver deep well water to the membrane plant via a booster pump station will be constructed. Preoperational testing and start-up of the first RO skid are scheduled for the third quarter of 2002.

In Phase 2, the RO building shell will be erected adjacent to the existing Membrane Filtration Plant. The second RO skid with a feed water capacity of 1,500 gpm will be built and installed in the new building. Operation of the second skid will initially utilize the existing membrane wash system. The RO permeate produced in Phases 1 and 2 will be delivered via existing pipelines to the Copperton Concentrator to be used as mill water. The concentrate will be conveyed through existing pipelines to the wastewater disposal pump station, from where it will be pumped to the tailings pipeline. The design of Phase 2 is scheduled to start in fall of 2002, construction will take place in 2003, and the start-up is scheduled for the fourth quarter of 2003.

Demonstration Plant for RO Filtration of Sulfate Plume Water

Table 3-5: Production and Average Performance

Year	Production Data										Average Process Data							
	Run Time	Down Time	Stream Factor	Feed Flow	Feed Vol.	Permeate Flow	Permeate Vol.	Concentrate Flow	Concentrate Vol.	Permeate Recovery	Temp	Feed Pressure	Diff. Pressure Stage 1	Diff. Pressure Stage 2	Avg. Flux	Conductivity Feed	Conductivity Conc.	Conductivity Perm.
	hrs	hrs	%	gpm	acft	gpm	acft	gpm	acft	%	(°F)	psi	psi	psi	gfd	mS/cm	mS/cm	mS/cm
2000	6,045	2,739	69%	297	331	223	247	75	83	76%	59.4	190	25	19	14.9	2.5	8.8	0.10
2001	5,940	611	91%	304	332	246	270	58	63	81%	58.6	211	30	20	16.4	2.6	10.0	0.24

Note: 2001 data are for the time from January through September.

REVERSE OSMOSIS PLANT - SITE KEY PLAN

NO.	DATE	REVISION	BY	CHK	APP
A	11-29-01	ISSUED FOR REVIEW	LRT		

NO.	DATE	REVISION	BY	CHK	APP

REFERENCE DRAWINGS	NUMBER	REFERENCE DRAWINGS	NUMBER

ENGINEERING SERVICES

APPROVAL	DATE	SCALE: 1"=400'	DATE
		DESIGNED BY LRT	11-15-01
		DRAWN BY LRT	11-15-01
		CHECKED BY	
		PROJECT ENGINEER	
		PROJECT MANAGER	

456M0200.dwg 12/19/01 11:31 krthiede

Phase 3 consists of the construction of the auxiliary facilities in the new plant, such as membrane wash system, chlorination equipment, degasifier, plant water tank, control room, conference/lunch room, laboratory, and locker room. This phase also includes the relocation of the Phase 1 RO skid from the existing Membrane Filtration Plant to the new plant. The product water pipeline to the JVWCD reservoir will be designed and constructed. The start-up of Phase 3 is scheduled for mid 2004, at which point the delivery of municipal quality product water to JVWCD will begin.

A more detailed time schedule is presented in Section 3.4.6.

3.4.4 Results of Demonstration Plant Operation

3.4.4.1 Process Description

In August of 1999, nine pressure vessels of the original second stage of Nanofiltration Skid # 1 were rearranged in order to test membrane filtration of sulfate plume water. Figure 3-9 presents a process block diagram of the Demonstration Plant. A two-stage configuration was selected with six vessels in the first stage and three vessels in the second stage Figure 3-10. Originally, nanofiltration membranes were used in this skid. In May of 2000, these membranes were replaced with Hydranautics CPA3 reverse osmosis membranes in order to provide an opportunity to gain operating experience with the RO filtration of sulfate plume water.

A submersible pump feeds water from wells B2G1193 (K60) and BFG1200 (K109) from the Yosemite Pump Station to the membrane plant. Bag and cartridge filters are used for pre-filtration. After injection of an antiscalant, the water is fed to the RO skid by a vertical turbine pump. During the demonstration phase, the combined permeate from both stages is pumped via the Bingham Tunnel Booster Pump Station to the Copperton Concentrator to be used as mill water. The concentrate is conveyed by system pressure to the Bingham Creek pipeline and from there via Wastewater Disposal Pump Station to the tailings line.

3.4.4.2 Production Data

The total volume of sulfate plume water processed through the membrane filtration demonstration plant was 331 acft in 2000 and 332 acft in 2001. The 2001 production data cover the time from January 1st through September 25th. At the end of September refurbishing of the electrical switchgear and control system at the deep wells was started. This required the shutdown of each of the two wells for about six weeks. As a result there was insufficient water available for the continuous operation of the RO demonstration plant.

The total volume of permeate produced was 247 acft in 2000 and 270 acft in 2001. In the frame of on-going process development, feed rate and permeate recovery were increased gradually throughout this time in order to establish optimal operating parameters. Feed rates of 290 to 300

RO Filtration of Sulfate Plume Water

Figure 3-9: Demonstration Plant Block Diagram

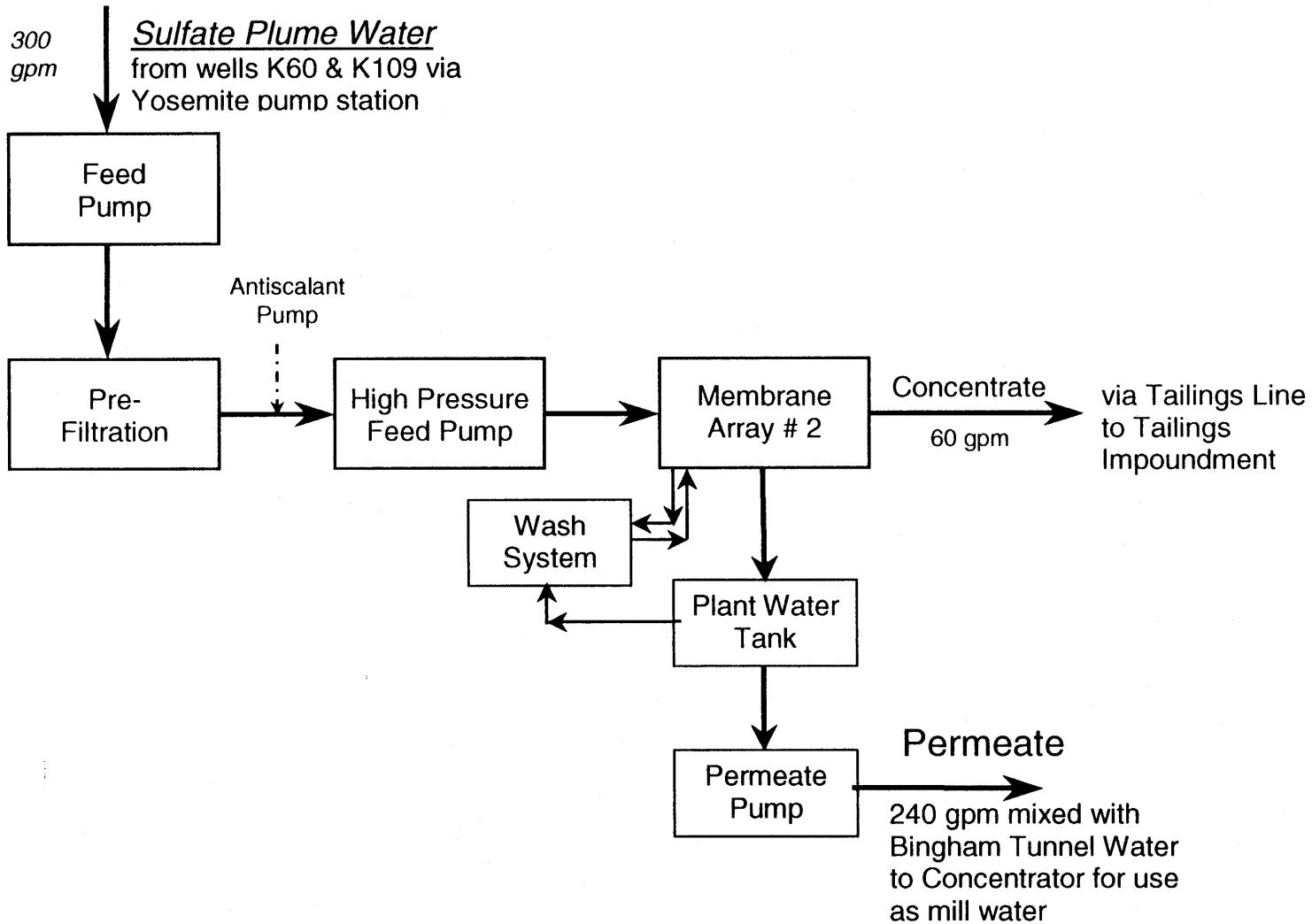

RO Filtration of Sulfate Plume Water

Figure 3-10: Demonstration Plant Membrane Array

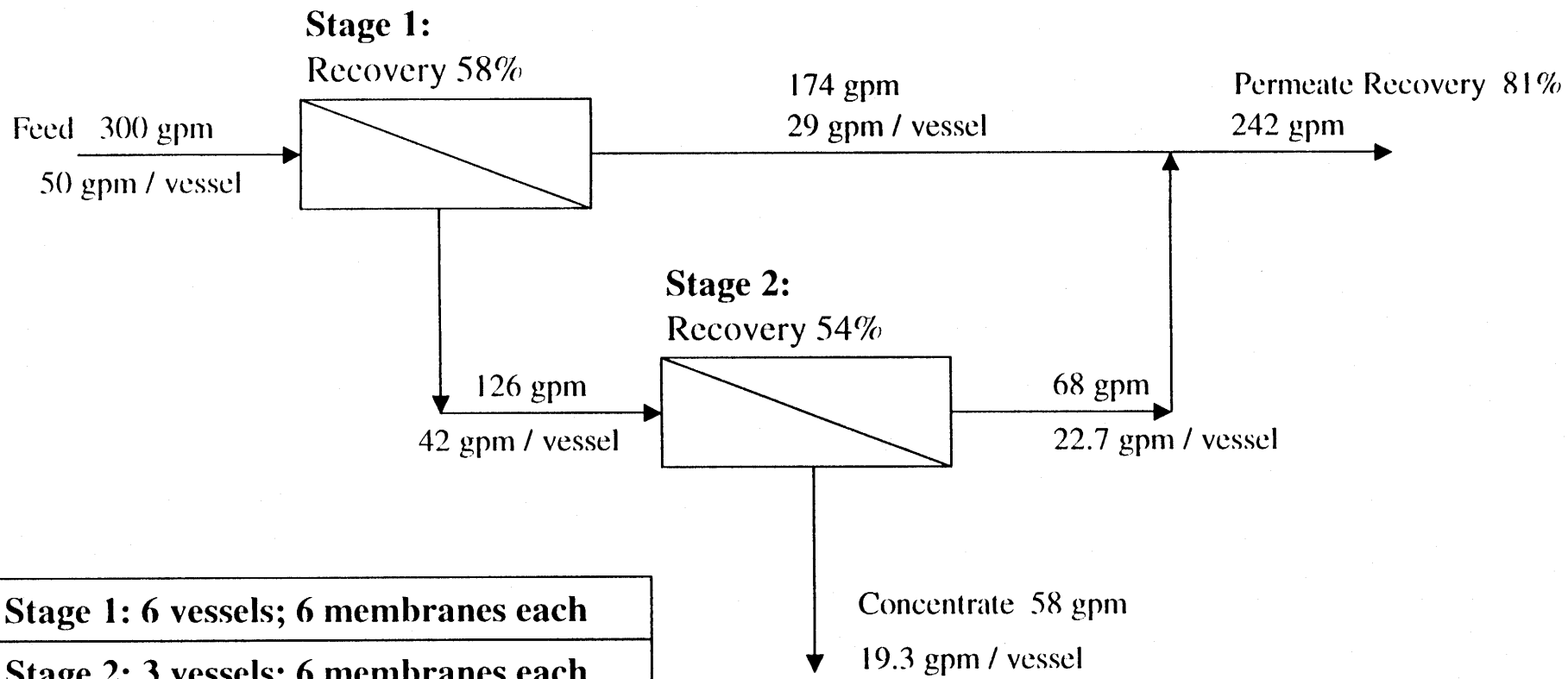

Stage 1: 6 vessels; 6 membranes each
Stage 2: 3 vessels; 6 membranes each

gpm and permeate recoveries of 75% to 85% were tested. The operating stream factor was 69% in 2000 and 91% in 2001. Table 3-5 presents an overview of production and average performance data for the demonstration plant.

Typical analyses of Sulfate Plume Water, RO permeate and concentrate are summarized in Table 3-6. Maximum Contaminant Levels (MCLs) and Utah Pollutant Discharge Elimination System (UPDES) Limits are included for comparison.

In May 2001, an inflow of chlorinated water into the system feeding water to the RO Demonstration Plant was detected. The chlorinated water is used by the mine as drinking water and it normally would not at all or only in small quantities report to the RO plant feed. Due to a mechanical problem elsewhere in the water system, this inflow became more pronounced and therefore was detected. Chlorine can damage polyamide membranes at very low concentrations. As a result, the salt rejection of the Demonstration Plant membranes dropped and the permeate TDS increased. The performance of these membranes and their cleanability have been compromised. In order to provide valid feedback to the Zone A Plant design, it was decided to purchase new membranes, which have been ordered. Furthermore, piping modifications were implemented in order to eliminate the potential for any further inflow of chlorinated water in the future.

3.4.5 Preliminary Design of the Zone A Reverse Osmosis Plant

3.4.5.1 Building

The building for the Zone A RO Plant will be erected adjacent to KUCC's existing Membrane Filtration Plant (ref. General Arrangement - Site Key Plan; Dwg. No. 456-M-0200 (Figure 3-8) and Site Plan, Dwg. No. 456-M-0201 (Figure 3-11)). Between the two buildings will be a covered breezeway.

The building will be a pre-engineered style steel building with an eave height of 15'0". The roofing and siding material will be high tensile steel with a silicon polyester finish. The structure shall be closed and sealed for weather tightness. Building finish color shall match the existing structures in the area. The roof shall have a slope of a minimum of 1" rise to 12" run. The interior of the building shall be insulated with a fiberglass batt insulation system. A control room, electrical room, conference/lunch room, mechanical room, lab, locker room, and restroom facilities shall be constructed inside the building. The building shall be adequately lighted, vented, heated and all normally occupied areas air-conditioned. A concrete utility service trench will be cast into the floor of the main operations area. All operation floors will slope to the service trench. The operation floors shall be slip-proof, smooth, and impervious. The trench shall serve as a pipe way and spill containment basin for the process. The RO building utility service trench shall be sloped and connected to the existing Membrane Filtration utility service trench. The trench floor will be at an elevation to stop liquid from flowing back from the Membrane Filtration utility service trench. All wastewater will be pumped and disposed of by the existing Membrane Filtration building sump pump. There is a 15" diameter emergency gravity overflow line connected to the existing Membrane Filtration utility service trench to

Demonstration Plant for RO Filtration of Sulfate Plume Water
Table 3-6: Typical Water Analyses Comparison to MCLs and UPDES

Kennecott Engineering Services

		Sulfate Plume Water	RO Permeate	*Maximum Contaminant Levels* [2]	RO Concentrate	*UPDES 30-day Avg.*	*UPDES Daily Max.*
Alkalinity	mg / l	**199**	**30**	*UR*	**943**		
Arsenic	µg / l	**< 5**	**< 5**	*50*	**23**	*250*	*500*
Calcium	mg / l	**432**	**16**	*UR*	**2,400**		
Cadmium	µg / l	**< 1**	**< 1**	*5*	**< 1**	*50*	*100*
Chloride	mg / l	**168**	**31**	*250*	**701**		
Copper	µg / l	**< 20**	**< 20**	*1,300*	**97**	*150*	*300*
Iron	µg / l	**< 300**	**< 300**	*300*	**410**		
Lead	µg / l	**< 5**	**< 5**	*15*	**< 5**	*300*	*600*
Magnesium	mg / l	**131**	**5**	*UR*	**872**		
Manganese	µg / l	**< 10**	**< 10**	*50*	**342**		
Potassium	mg / l	**4**	**< 1**	*UR*	**24**		
Selenium	µg / l	**7**	**< 2**	*50*	**36**	*na*	*54*
Sodium	mg / l	**73**	**21**	*UR*	**354**		
Sulfate	mg / l	**1,305**	**24**	*1,000*	**6,820**		
Zinc	µg / l	**25**	**< 10**	*5,000*	**104**	*224*	*500*
TDS	µS / cm	**2,290**	**130**	*2,000*	**12,700**		
pH	su	**7.1**	**6.2** [1]	*6.5 - 8.5*	**7.7**	*6.5 - 9.0*	

Notes:

UR = unregulated; UPDES = Utah Pollutant Discharge Elimination System

1) The pH of the RO permeate averaged 6.2 without decarbonation. Laboratory tests showed that decarbonation will raise the pH above 7.5.

2) Water Quality Maximum Contaminant Levels (MCLs) as in effect on August 1, 2001 (Rule R309-103, Utah Administrative Code.

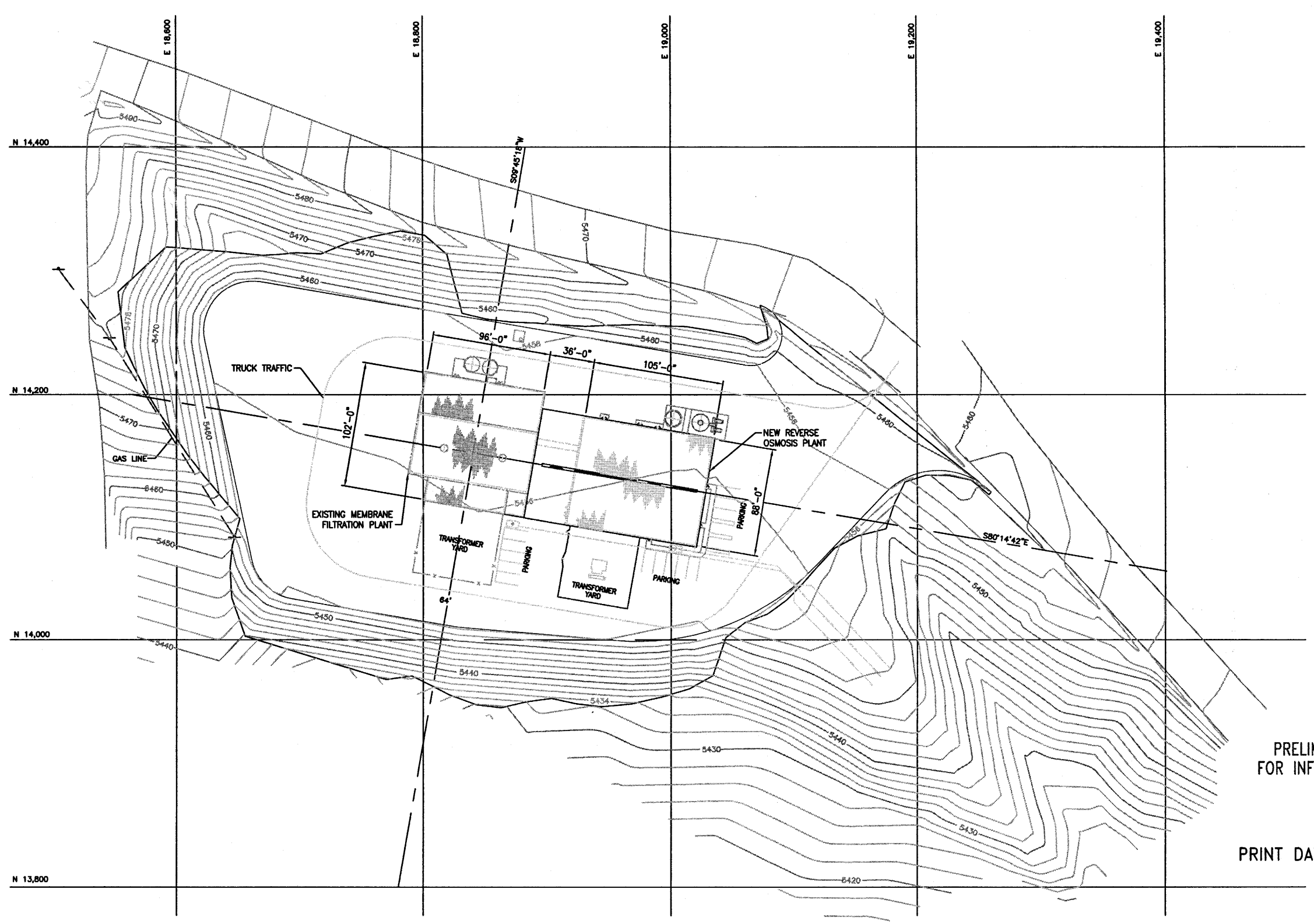

PRELIMINARY
FOR INFORMATION

PRINT DATE: 01-30-02

NO.	DATE	REVISION	BY	CHK	APP
1	11-29-01	MISC. REVISIONS	LRT		
0	11-12-01	FIRST ISSUE FOR REVIEW	LRT		

NO.	DATE	REVISION	BY	CHK	APP

REFERENCE DRAWINGS	NUMBER
GENERAL ARRANGEMENT BLDG. ELEVATIONS	456-M-203
GENERAL ARRANGEMENT – PLAN	456-M-202
SITE KEY PLAN	456-M-200

REFERENCE DRAWINGS	NUMBER

ENGINEERING SERVICES

APPROVAL	DATE	SCALE: NOT TO SCALE	DATE
		DESIGNED BY LRT	11-12-01
		DRAWN BY LRT	11-12-01
		CHECKED BY	
		PROJECT ENGINEER	
		PROJECT MANAGER	

KENNECOTT
UTAH COPPER

FIGURE 3-11
ZONE "A" REVERSE OSMOSIS PLANT
GENERAL ARRANGEMENT
SITE PLAN

Job No. 10-00701 | Dwg. No. 456-M-0201 | REV B

456M0201.dwg 12/19/01 11:17 krthiede

ensure that no wastewater will overflow the service trench. The overflow line drains to KUCC's desilting basin located in Bingham Canyon.

Facility design and construction shall comply with federal, state, and local regulatory agencies for items such as design, earthquake, flood, fire, safety, and handicap requirements.

The building layout is shown on the general arrangement plan (Figure 3-12 Dwg. No. 456-M-0202). The general building dimensions are summarized in Table 3-7:

Table 3-7: Zone A RO Plant - Building Dimensions:

	Length ft	Width ft	Area ft^2
Main Process Area	84	48	4,032
Wash System / Antiscalant	84	20	1,680
Chlorination	25	21	525
Electrical Room	63	20	1,260
Control Room	21	20	420
Laboratory	21	11	231
Aux. Facilities	52	21	1,092
Total	105	88	9,240

3.4.5.2 Process

The process design of the Zone A RO plant incorporates the experience gathered during the operation of the Demonstration Plant. This section describes the major process steps and the respective equipment. The process flow diagram is presented in Figure 3-13 Drawing No. 456-F-0101.

The presently foreseen water sources for the Zone A RO plant are deep wells B2G1193 (K60), BFG1200 (K109), and the sulfate extraction well LTG1147. Water from these wells will be delivered to the plant via a booster pump station, which is located approximately 800 ft south of Zone 2 of the Large Bingham Reservoir (Figure 3-8 Site Key Plan, Dwg. No. 456-M-0200). The focus of blending the waters from these three wells is to keep the sulfate concentration in the feed water to the Zone A Plant below 1,200 ppm. Table 3-8 shows a potential blending scenario with recent water chemistries for the three wells. As wells B2G1193 (K60) and BFG1200 (K109) increase in TDS over time, the blending ratio will have to compensate or the permeate recovery will have to be lowered.

During Phases 1 and 2, the produced permeate will be pumped through existing piping to the Copperton Concentrator. In Phase 3, the permeate pipeline will be constructed from the Zone A plant to the JVWCD reservoir, which is located approximately 0.5 miles east of the intersection of Highway 111 and the Old Bingham Highway. Upon completion of Phase 3, delivery of municipal quality product water to JVWCD will begin. The produced concentrate will be

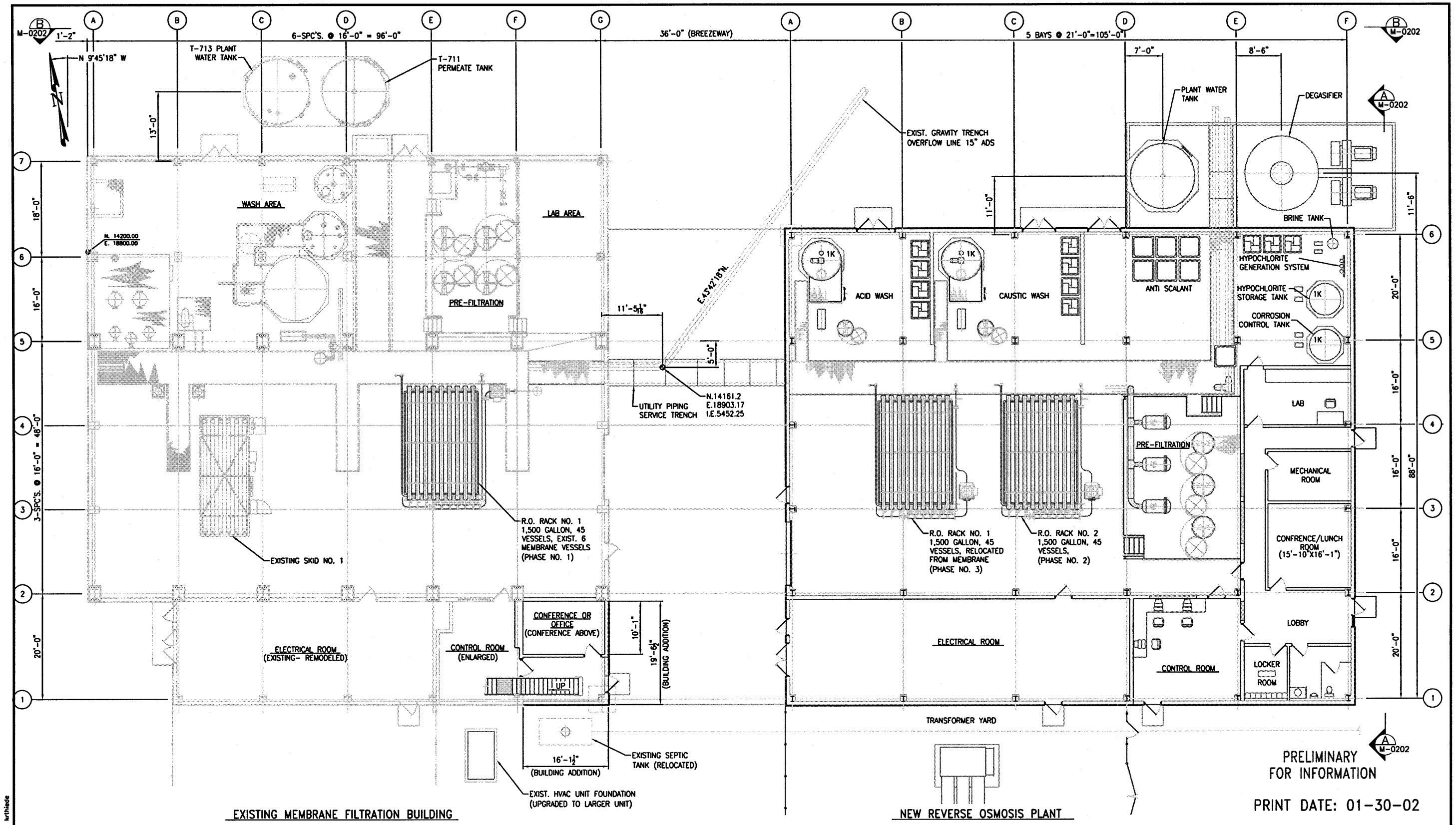

NO.	DATE	REVISION	BY	CHK	APP
2	11-28-01	MISC. REVISIONS	LRT		
1	11-12-01	FIRST ISSUE	LRT		

REFERENCE DRAWINGS	NUMBER
GENERAL ARRANGEMENT BLDG. ELEV'S	456-M-0203
PLANT SITE PLAN	456-M-0201
SITE KEY PLAN	456-M-0200

ENGINEERING SERVICES

APPROVAL	DATE	SCALE: NOT TO SCALE	DATE
		DESIGNED BY LRT	11-28-01
		DRAWN BY LRT	11-28-01
		CHECKED BY	
		PROJECT ENGINEER	
		PROJECT MANAGER	

KENNECOTT
UTAH COPPER

FIGURE 3-12
ZONE "A" REVERSE OSMOSIS PLANT
GENERAL ARRANGEMENT
PLAN

Job No. 10-00701 | Dwg. No. 456-M-0202 | REV B

456M0202.dwg 12/20/01 09:32 lrthiede

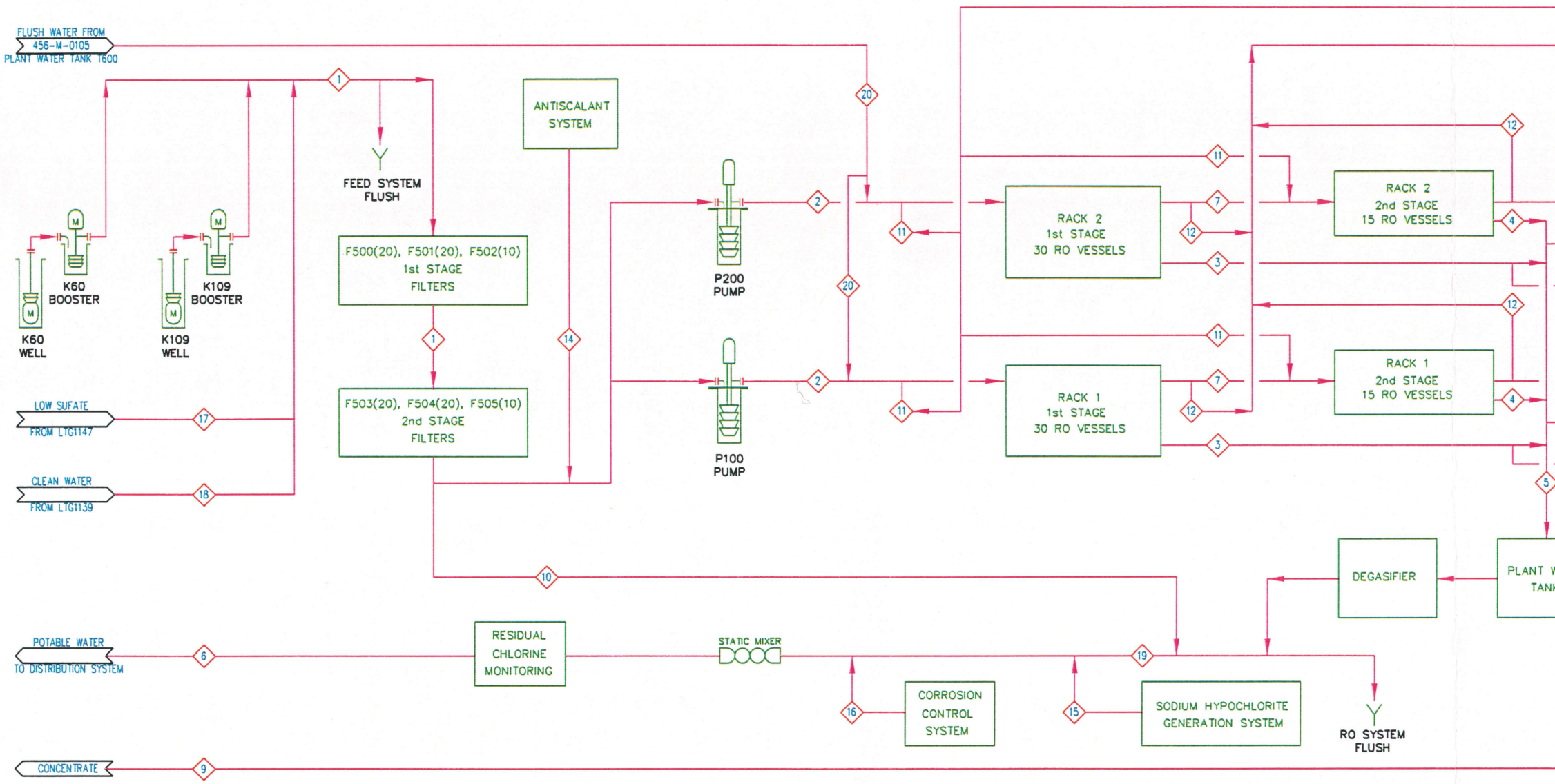

STREAM		FEED WATER			STAGE 1 FEED			STAGE 1 PERMEATE			STAGE 2 PERMEATE			PLANT PERMEATE			PRODUCT WATER			STAGE 1 CONCENTRATE			STAGE 2 CONCENTRATE			PLANT CONCENTRATE			FILTERED BYPASS			WASH FEED			WASH RETURN			WASH PERMEATE			ANTISCALANT			HYPOCHLORITE			CORROSION CONTROL			LO FE
NUMBER		1			2			3			4			5			6			7			8			9			10			11			12			13			14			15			16			
	UOM	MIN	OPER	MAX	MIN	OPER	MAX	MIN	OPER	MAX	MIN	OPER	MAX	MIN	OPER	MAX	MIN	OPER	MAX	MIN	OPER	MAX	MIN	OPER	MAX	MIN	OPER	MAX	MIN	OPER	MAX	MIN	OPER	MAX	MIN	OPER	MAX	MIN	OPER	MAX	MIN	OPER	MAX	MIN	OPER	MAX	MIN	OPER	MAX	
FLOW	GPM	500	3,200	3,900	750	1,500	1,800	75	847.5	1080	60	352.5	375	405	2,400	2,910	270	2,600	3,200	600	652.5	720	270	300	540	270	600	1,080	0	200	300	600	700	1,000	600	700	1,000	20	50	150	0.006	0.023	0.030	0.24	0.47	1.00				
PRESSURE	PSIG	60	80	100	150	220	600	8	12	16	8	12	16	8	12	16	8	12	16	150	200	580	150	180	560	150	180	560	60	80	100	25	35	50	25	35	50	8	12	16	65	85	105	30	40	50				
TEMPERATURE	F	50	58	65	50	58	65	50	58	65	50	58	65	50	58	65	50	58	65	50	58	65	50	58	65	50	58	65	50	58	65	50	100	104	50	100	104	50	100	104	60	68	80	60	68	80				
CONDUCTIVITY	mS/cm	2.0	2.6	4.0	2.0	2.6	4.0	0.01	0.15	0.35	0.05	0.4	0.6	0.02	0.2	0.5	0.02	0.5	0.6	2.0	2.6	4.0	2.0	2.6	4.0	2.0	2.6	4.0	2.0	2.6	4.0																			
pH	su	6.0	7.0	7.5	6.0	7.0	7.5	5.8	6.5	6.8	5.8	6.5	6.8	5.8	6.5	6.8	6.5	7.5	8.5	6.0	7.0	7.5	6.0	7.0	7.5	6.0	7.0	7.5	6.0	7.0	7.5	2.0		10.2	2.0		10.2	2.0		10.2										
STREAM FACTOR	%																	85																																	
MISC.																																																		

NO.	DATE	REVISION	BY	CHK	APP
1	11-29-01	ISSUED FOR REVIEW	LRT		

NO.	DATE	REVISION	BY	CHK	APP

REFERENCE DRAWINGS — NUMBER

REFERENCE DRAWINGS — NUMBER

ENGINEERING SERVICES

APPROVAL	DATE	SCALE: NONE
		DESIGNED BY GH
		DRAWN BY EGH
		CHECKED BY LRT
		PROJECT ENGINEER LRT
		PROJECT MANAGER HGB

456f0101.dwg 12/19/01 11:20 krthiede

Zone A Reverse Osmosis Plant
Table 3-8: Feed Water Blending

Kennecott Engineering Services

	pH	Cond.	Temp.	TDS	Alk	Cl	SO4	Ca	Mg	K	Na	Flow	Volume	Ratio
	su	uS/cm	°C	mg/l	mg/l	mg/l	mg/l	mg/l	mg/l	mg/l	mg/l	gpm	acft/yr	
K60 (B2G1193)	7.0	3,217	13.8	2,707	213	163	1,757	549	164	4.2	81	1,100	1,508	34%
K109 (BFG1200)	7.3	2,333	16.3	1,923	194	142	1,121	366	100	3.6	71	1,100	1,508	34%
LTG1147	7.3	2,293	15.3	1,707	224	218	734	338	83	5.0	91	1,000	1,371	31%
Feed Mix	7.2	2,624	15.2	2,125	210	173	1,219	420	117	4.3	81	3,200	4,387	100%

Stream Factor 85%

conveyed through existing pipelines to the Wastewater Disposal Pump Station and from there to the tailings pipeline.

The RO filtration process uses spiral wound membranes, which separate the pressurized feed water stream into two streams, namely permeate and concentrate. The permeate passes through the semipermeable membranes and is characterized by very low TDS concentrations, as the RO membranes reject dissolved solids at rates of 95-99%. The balance of the feed water passes across the outer surface of the membrane and becomes the concentrate, which contains the constituents that have been rejected by the membranes.

The RO permeate is degasified to remove carbon dioxide and lower the corrosivity. Subsequently, the permeate is blended with filtered feed water in order to achieve the desired product water TDS. The last step of the process is the chlorination. Water analyses performed by JVWCD have shown that Sulfate Plume Water from the deep wells has no organic contamination and therefore chlorination is only required to provide the residual chlorine to avoid microbiological growth in the distribution system.

Prefiltration

The first process step is the prefiltration of the feed water. This will be accomplished in two stages. The first stage consists of polypropylene filter bags (rating: nominal ten micron; 7" diameter; 32" length; typical flow capacity 100 gpm per bag). This stage is designed to protect the more expensive second stage prefilters from sudden bursts of suspended solids, which can occur when well pumps are being started and stopped repeatedly or when pipe scale breaks loose. The second stage prefiltration uses polypropylene cartridges (rating: nominal five micron; 2.5" diameter; 39" length; typical flow capacity 20 gpm per cartridge). Two-stage prefiltration was also selected to ensure effective removal of suspended solids from feed water, because a slip stream of prefiltered feed water will be blended with the RO permeate to achieve the desired total dissolved solids (TDS) concentration in the final product water (Table 3-9).

Antiscalant Addition

The dissolved gypsum concentration in Sulfate Plume Water approaches saturation. As this water becomes more concentrated in the membrane filtration process, gypsum saturation is exceeded up to 700%. Silica saturation can also be exceeded. To avoid membrane fouling due to precipitation of these compounds in the feed spacer of the membranes, antiscalants are being added to the membrane feed. A chemical dosing pump pulls antiscalant from a 275 gal tote bin and injects it into the feed water upstream of the high-pressure pump. The addition rate is monitored by periodic checking of the dosing pump calibration and by recording the level change in the tote bin every shift. The antiscalants to be used are certified under ANSI/NSF Standard 60 for drinking water production, they are compatible with the membranes, and they have been tested extensively at the Demonstration Plant.

RO System

The RO System consists of the high-pressure feed pumps and the two membrane skids. The high-pressure feed pumps are vertical turbine pumps of all stainless steel construction. Totally enclosed fan cooled (TEFC) motors with variable-frequency drives (VFD) will be used.

Zone A Reverse Osmosis Plant
Table 3-9: Feed Water Blending

Kennecott Engineering Services

	pH su	Cond. uS/cm	Temp. °C	TDS mg/l	Alk mg/l	Cl mg/l	SO4 mg/l	Ca mg/l	Mg mg/l	K mg/l	Na mg/l	Flow gpm	Volume acft/yr	Ratio
K60 (B2G1193)	7.0	3,217	13.8	2,707	213	163	1,757	549	164	4.2	81	1,100	1,508	34%
K109 (BFG1200)	7.3	2,333	16.3	1,923	194	142	1,121	366	100	3.6	71	1,100	1,508	34%
LTG1147	7.3	2,293	15.3	1,707	224	218	734	338	83	5.0	91	1,000	1,371	31%
Feed Mix	7.2	2,624	15.2	2,125	210	173	1,219	420	117	4.3	81	3,200	4,387	100%

Stream Factor 85%

Two membrane skids of nominal 1,500 gpm feed rate will be installed. The skids will use two-stage arrays, with 30 pressure vessels in the first stage and 15 pressure vessels in the second stage (Figure 3-14: Membrane Array, and Figure 3-15: Vessel Rack General Arrangement Drawing No. 456-M-0204). The first stage will consist of six rows of five vessels each. The second stage will have three rows of five vessels each. A common feed header from the high-pressure pump will supply the six rows in the first stage. A common header from the concentrate discharges of the first stage shall feed the second stage. By reducing the number of vessels in the second stage, the crossflow velocity will be increased to minimize membrane fouling. The permeate from both stages will be collected in one common header. The structure to support vessels and piping will be fabricated from carbon steel and will be epoxy coated. The rack will contain feed and discharge piping required for membrane washing. Appropriate means to guarantee the isolation of wash solution and wash permeate from product water will be installed, i.e. removable spool pieces. Pipe connections shall be made by easily removable couplings. All of the pipe on the rack will be stainless steel.

The fiberglass vessels are 6-membrane vessels with a diameter of 8". The membrane skid will also be equipped with the required instrumentation for fully-automated operation, such as flow and pressure transmitters for feed, permeate, and concentrate, conductivity meters for feed and permeate, and concentrate flow control valve. Various types of polyamide membranes designed for brackish feed water have been evaluated for their usage in this project. At present, two membranes from Hydranautics are being considered, the energy-saving ESPA and the composite polyamide CPA. The Demonstration Plant is presently equipped with CPA3 membranes. These membrane will be exchanged for ESPA2 in the next few months. The two skids of the Zone A Plant can be equipped with two different types of membranes and thereby a good comparison of their performance can be achieved. The question of membrane optimization will be an ongoing issue as membrane manufacturers develop new and more effective and less costly products.

Degasifier

Laboratory tests with permeate from the Demonstration Plant have shown that aeration of permeate can raise the pH from 6 to 7.5. In the Zone A Plant, a forced draft decarbonator will be used to remove dissolved carbon dioxide from the RO permeate. In the decarbonator, the inflow is sprayed into the top of a tower filled with packing material. While the water flows in a thin film over the packing material surface, a centrifugal fan blows air into the sump below the packing. The air intake to the fan is filtered with a high efficiency particulate arrestance (HEPA) filter. Carbon dioxide gas is released and vented through the top of the degasifier. The decarbonated water flows by gravity from the clear well of the degasifier to TDS adjustment and chlorination.

TDS Adjustment

Due to the fact that RO permeate has very low TDS, a slip stream of prefiltered feed water will be blended with the permeate to achieve the desired TDS concentration in the final product water. Table 3-9 presents one possible blending scenario.

Chlorination

Product water disinfection will be achieved by chlorination. Water analyses performed by JVWCD have shown that Sulfate Plume Water from the deep wells has no organic

ZONE A RO Plant for Filtration of Sulfate Plume Water
Figure 3-14: Membrane Array

CONFIDENTIAL INFORMATION

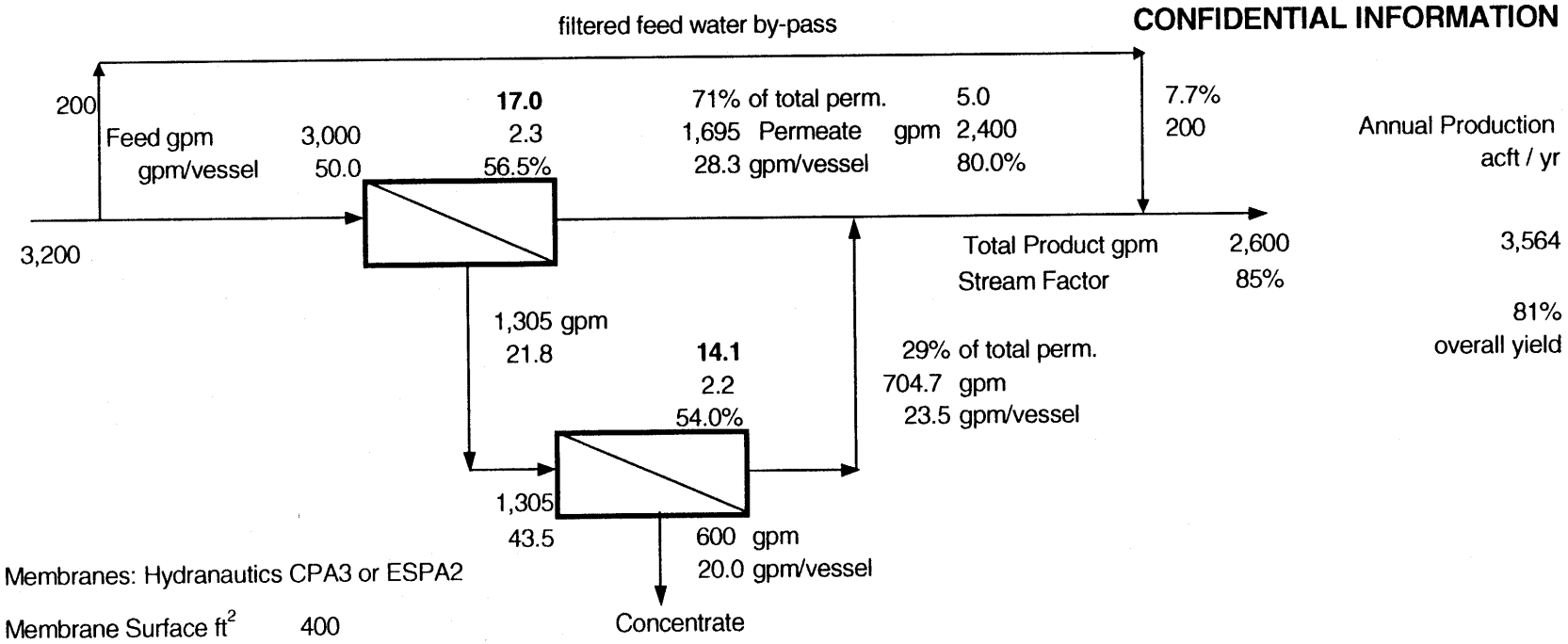

	Vessels	Membr. / vessel	Membranes	Membrane Area ft^2	Permeate Recovery	Concentration Factor	**Permeate Flux gfd**
Stage 1	60	6	360	144,000	56.5%	2.3	**17.0**
Stage 2	30	6	180	72,000	54.0%	2.2	**14.1**
Total	90		540	216,000	80.0%	5.0	**16.0**

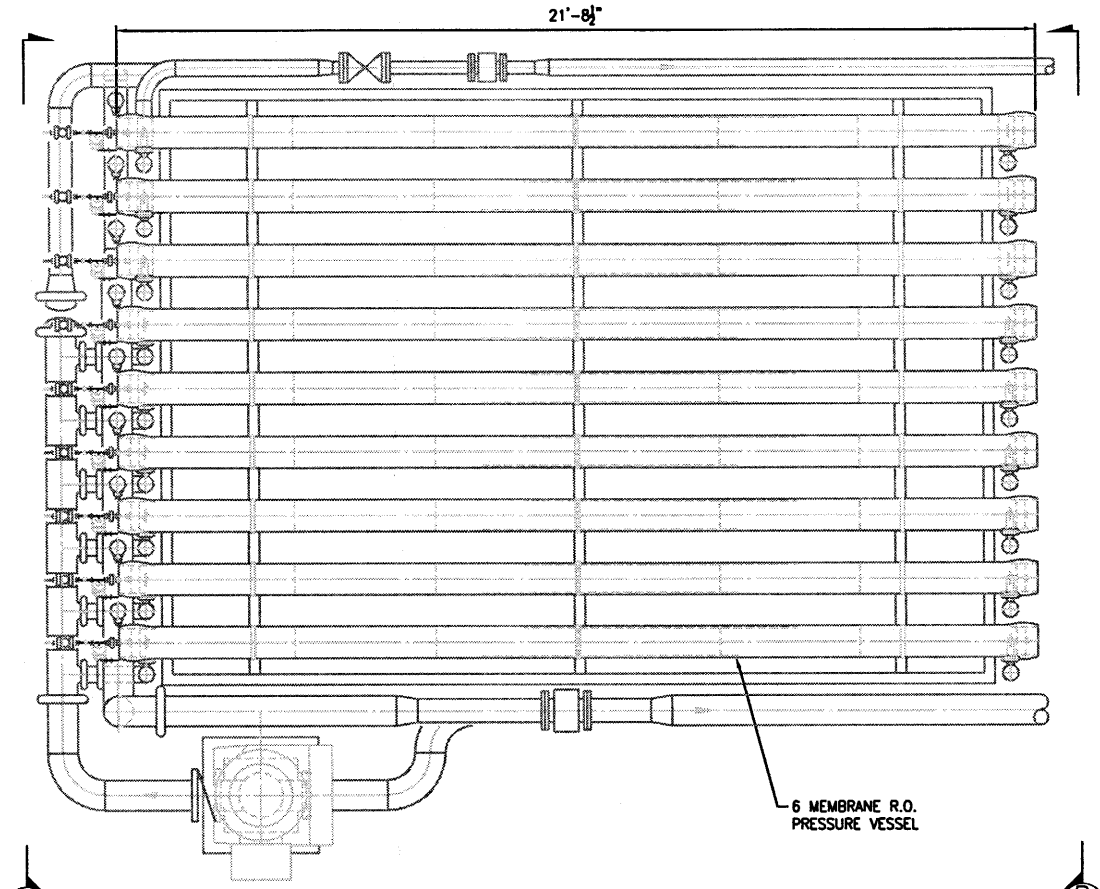

PLAN

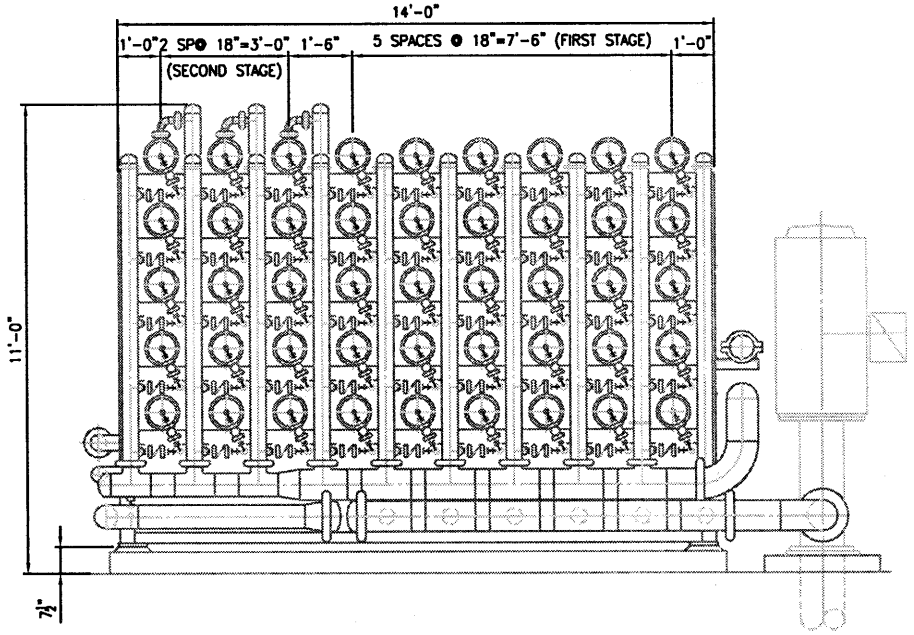

VIEW A
1/2"=1'-0"

(PERMEATE AND FEED END)

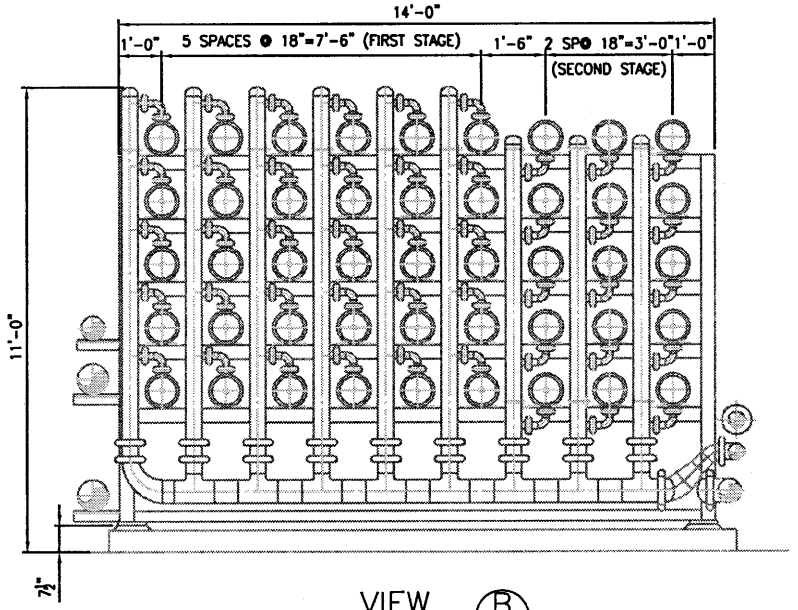

VIEW B
1/2"=1'-0"

(FIRST STAGE DISCHARGE, SECOND STAGE FEED)

PRELIMINARY
FOR INFORMATION
PRINT DATE: 01-30-02

NO.	DATE	REVISION	BY	CHK	APP
A	12-18-01	FIRST ISSUE	LRT		

REFERENCE DRAWINGS	NUMBER
GENERAL ARRANGEMENT – PLAN	456-M-0202
PROCESS FLOW DIAGRAM	456-F-0101

ENGINEERING SERVICES

APPROVAL	DATE	SCALE: NOT TO SCALE	DATE
		DESIGNED BY LRT	12-18-01
		DRAWN BY LRT	12-18-01
		CHECKED BY	
		PROJECT ENGINEER	
		PROJECT MANAGER	

KENNECOTT
UTAH COPPER

FIGURE3-15
ZONE "A" REVERSE
OSMOSIS PLANT 1500 G.P.M. VESSEL
RACK GENERAL ARRANGEMENT

Job No. 10-00701A | Dwg. No. 456-M-0204 | REV A

contamination, and therefore chlorination is only required to provide the residual chlorine of 0.3 ppm to avoid microbiological growth in the distribution system. The chlorination equipment will be designed to provide 2 ppm for shock chlorination. Disinfection byproducts (DBP) are not a concern due to the lack of organics in the feed water.

Chlorination will be accomplished using an on-site sodium hypochlorite generation system. The principle of operation is the electrolytic conversion of sodium chloride to sodium hypochlorite. This technology has the advantage over the traditional use of chlorine gas that no hazardous materials are involved. The only chemical stored on site will be salt. The concentration of the produced sodium hypochlorite solution is < 1.0%. The system consists of a brine tank and proportioning pump, the electrolytic cells, the hypochlorite storage tank (capacity: one day's usage), and the metering pumps. The metering pumps inject the sodium hypochlorite solution into the product water line and the residual chlorine is measured with a respective meter. In case a component failure occurs in the chlorination system and cannot be resolved within a day, commercial sodium hypochlorite solution can be purchased, diluted 15 : 1, and fed into the system.

Membrane Wash System

The membrane wash system consists of tanks for alkaline and acidic wash solutions, the wash pump, and a bag filter to remove suspended solids from the circulating wash solution. Depending on the type of foulant, either alkaline or acidic wash solutions will be prepared in their respective tanks and heated to 40°C. After taking the skid that requires washing off line, the skid will be flushed with RO permeate. Then the spool pieces that guarantee the separation of wash water and wash permeate from product water will be installed. Subsequently, the wash solution will be circulated through the membranes for several hours. An alkaline wash may be followed by an acidic wash or vice versa. Permeate flushes will be performed between and after washes. For this purpose, a plant water tank is installed in order to store RO permeate for washing and flushing.

Control System and Instrumentation

A Programmable Logic Controller (PLC) with color graphics operator interface will be installed to operate the plant with all its equipment and functions. The plant will be equipped with the appropriate instrumentation to permit fully automated operation with minimum requirements for operator interference. The PLC will also be instrumented with a modem to allow remote control of the operation. In case an alarm condition occurs during unattended operation, the PLC will be programmed to page the operator on call and alert him/her of the alarm condition. The operator on call will have a laptop computer with which (s)he can connect to the plant via modem to determine the cause and nature of the alarm. In most cases the operator will be able to remedy the alarm condition via modem. In case the operator cannot resolve the problem from the laptop computer, (s)he then will drive to the plant to correct the situation. Should the operator on call fail to respond to the alarm, the PLC will page the next person on the call list. In case the alarm condition is not taken care of and the plant operation deviates farther from its set points, the plant can be shut down and put through an automatic permeate flush, after which the equipment will be parked in a stand-by mode until further instructions from the operator are received. This approach allows remote operation and protects the whole plant in case of unusual circumstances.

Piping System

Water from wells B2G1193 (K60), BFG1200 (K109), and the sulfate extraction well LTG1147, will be delivered to the Zone A RO Plant via a recently constructed booster pump station. The booster pump station is located approximately 800 ft south of Zone 2 of the Large Bingham Reservoir (Figure 3-8 Site Key Plan, Dwg. No. 456-M-0200). In Phase 1, a new 16" feed line will be installed from the existing deep well water pipeline to the booster pump station (3,700 linear feet). Existing piping from the booster pump station to the Membrane Filtration Plant will be used in this Phase. In Phase 2, a new 12" pipeline will be installed from the booster pump station to the Zone A RO Plant.

In Phases 1 and 2, existing piping will be used to convey the produced RO permeate to the Copperton Concentrator for use as process water. In Phase 3, a 12,200 feet long permeate pipeline will be constructed to supply the Zone A RO Plant product water to the JVWCD reservoir, which is located approximately 0.5 miles east of the intersection of Highway 111 and the Old Bingham Highway.

In Phase 1, the produced concentrate will be conveyed through existing pipelines to the Wastewater Disposal Pump Station and from there to the tailings pipeline. In Phase 2, 5,300 linear feet of 8" pipeline will be added to accommodate the higher flow of concentrate.

3.4.6 Time Schedule

The time schedule for the three phases of development of the Zone A Reverse Osmosis Plant is presented in Figure 3-16. The scope of the three phases is:

Phase 1:

- installation of the first 1,500 gpm RO Skid in the existing Membrane Filtration Plant, using existing high-pressure pumps and pressure vessels.
- modification of the membrane wash system to meet the requirement of guaranteed separation of wash medium and wash permeate from RO feed and permeate;
- construction of the pipeline to deliver deep well water to the membrane plant; the respective booster pump station is already constructed except for completion of the electrical system.

Preoperational testing and start-up of the first RO skid are scheduled for the third quarter of 2002.

Phase 2:

- construction of the shell of the Zone A Plant building;
- installation of the second 1,500 gpm RO skid in the new building;

Design of Phase 2 is scheduled to start in fall of 2002, construction will take place in 2003, and the start-up is scheduled for the fourth quarter of 2003.

Figure 3-16: ZONE "A" REVERSE OSMOSIS PLANT - TIME SCHEDULE

Kennecott Engineering Services

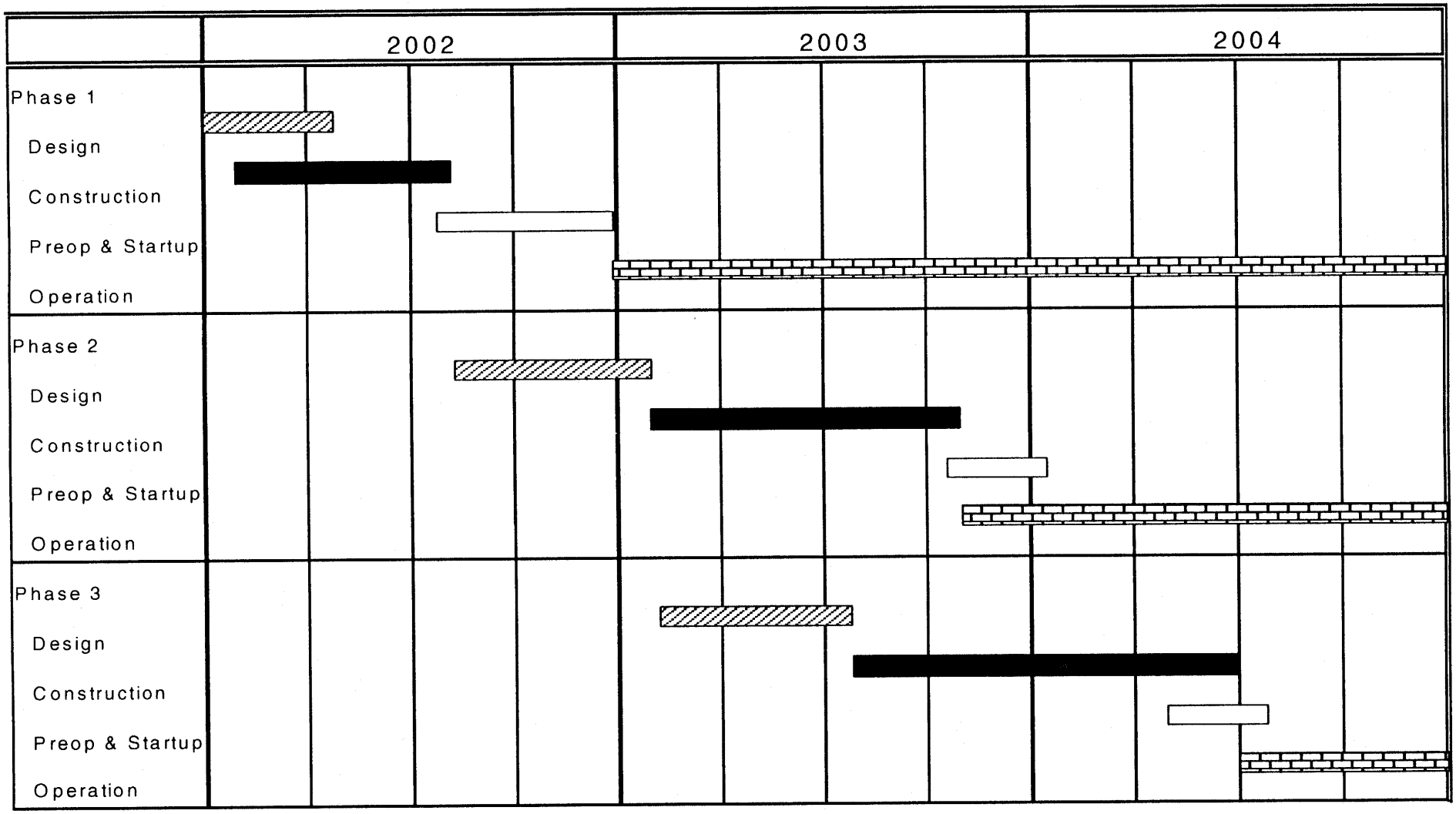

Phase 3:

- completion of the interior facilities of the new building, including control room, conference/lunch room, laboratory, locker room, and rest room;
- installation of the auxiliary facilities in the new plant, including membrane wash system, chlorination equipment, degasifier, plant water tank;
- relocation of the Phase 1 RO skid from the existing Membrane Filtration Plant to the new plant;
- construction of the product water pipeline to the JVWCD reservoir.

Start-up of Phase 3 is scheduled for mid 2004, at which point the delivery of municipal quality product water to JVWCD will begin.

3.5 Management of Acidic Waters and RO Concentrates in KUCC Tailings Circuit

3.5.1 Overview of Water Management in Tailings Circuit

While the mine is operating, KUCC will convey the following mining-affected waters to the Magna Tailings Impoundment in two existing tailings pipelines:

- Acid-plume water;
- Meteoric drainage from the Eastside Collection System
- RO Concentrates from treatment of the Zone A sulfate plume;
- Mildly acidic waters from dewatering of the open pit.

The first three types of water are commingled in and pumped through the Wastewater Disposal Pump Station. The mine dewatering flows are pumped directly to the process circuit through two different lines. Figure 3-17 is a schematic diagram of the process circuit showing the routing of waters and providing recent estimates of water flows in the system.

After mine closure, effluents from the treatment systems will be conveyed to the Great Salt Lake via a concentrate discharge line, provided the water chemistry at that time meets regulatory discharge limits. If one or both of the concentrates is not suitable for direct discharge, then additional treatment (e.g., lime addition) or alternative disposal (e.g., evaporation) will be needed. If concentrate from treatment of Zone B wells cannot be discharged to the Jordan River, these concentrates may also be delivered to the KUCC system.

For both the operational and post-mining periods, KUCC is developing a performance-based Remedial Design for the final management of acidic waters and water-treatment concentrates.

3.5.2 Operational Conditions

3.5.2.1 Performance Criteria

A. Flow

When fully operational, the tailing process circuit (see Figure 3-17) must be able to handle the following maximum flows with 90% availability:

- Tailings: 150,000 to200,000 tpd
- Acid Plume Water: Up to 2500 gpm
- Meteoric Leach Water: Up to 1,500 gpm
- Zone A RO Treatment Concentrates: Up to 800 gpm

B. Solution Chemistry in the Tailing Line

The system must be able to maintain a fluid pH of 6.7 or greater as measured at the North Splitter Box (Sample Point MCP2536) with 90% availability to ensure dissolved metal precipitation and sequestration in the tailings impoundment.

C. Integration with Tailing Disposal System

1. KUCC will meet all UPDES discharge criteria at Outfall 012 from the North Impoundment to Great Salt Lake (or other permitted outfalls).
2. If the monthly average Net Neutralization Potential (NNP, calculated using the Modified Sobek Procedures) of the Copperton Concentrator General Mill Tailings (GMT) is less than 10 t CaCO3/kt or if the NPR is less than 1.3, then the average monthly NNP of samples collected from the tailings discharge at the tailings impoundment must have an NNP and NPR that are equal to or higher than the Copperton Mill Tailings for the month. If the monthly average NNP of the Copperton Concentrator General Mill Tailings is greater than 10 t CaCO3/kt or the NPR is more than 1.3, then the average monthly NNP of samples collected from the tailings discharge at the impoundment must have an NNP of at least 10 t CaCO3/kt. The monthly NNP value will be determined based on a rolling six month average from monthly composite samples collected at the GMT and tailings impound discharge locations.

3.5.2.2 Project Delivery Strategy

A. In February 2002, KUCC will complete modifications to the tailing discharge line. The new, larger diameter pipe is intended to mitigate the impacts of scale build-up on operations of the discharge lines and to permit simpler, faster and more effective de-scaling in the future.
B. In Q1 2002 and prior to increasing pumping rates from the acid plume, KUCC will modify its existing lime-treatment capabilities at the Copperton Concentrator and from the Concentrator to Drop Box NP-6A to permit lime addition on a 24-hr/day basis. For the purposes of this portion of the Preliminary Design, the area from the Concentrator to NP-6A will be called the "Concentrator Complex".
C. In Q1 2002, KUCC will establish standard operating procedures, including on-going maintenance and calibration tests, for the in-line pH sensors at North Splitter Box and for the telemetry system that connects those sensors to the lime-addition system at the Concentrator complex.
D. By the end of Q4 2003, KUCC will have in place at the Concentrator Complex the capability of adding up to 200 tpd lime (as CaO) to the tailing line.

E. KUCC and its contractors will continue the geochemical studies and sampling program needed to support the Final Design.

3.5.2.3 Preliminary Drawings and Sketches

The Tailings Circuit is shown schematically in Figure 3-17.

3.5.2.4 Results of Additional Field Sampling

A. Tailings-Line Fluid Chemistry

From late May through November 2001 KUCC has monitored the existing tailing line from the Copperton Concentrator to the North Impoundment while acidic waters have been discharged to the tailings line. During this time period, KUCC was pumping the acid plume at 500 – 550 gpm (ca. 360 gpm as nanofiltration concentrate), and discharge from the Eastside Collection System was approximately 1200 gpm. The pH in the tailing line was maintained by a combination of controlling flow of acidic waters from the WDPS and/or addition of lime (CaO). Monitoring points on the circuit are identified in Figure 3-17. The time-series results for each of the monitoring points are compiled in Appendix A.

Key parameters for evaluating the system performance include:

- pH (Figure 3-18)
- Cl (Figure 3-19)
- Ca (Figure 3-20)
- SO4 (Figure 3-21)
- Metals (illustrated using Al, Figure 3-22)

The data in Appendix A and Figures 3-18 to 3-22 show that the tailing line maintained good chemical quality of discharge waters at these flow rates. Mass-balance modeling shows that gypsum is precipitating, and the correlated changes in pH and Al show that pH-sensitive metals are being attenuated in the flow system. Essentially all the changes in water chemistry occur between Drop Box NP5 and the North Splitter Box. The observed chemistry at North Splitter Box is indistinguishable (within analytical precision) from chemistry of discharge to the North Impoundment. A detailed evaluation of KUCC's current understanding of the tailings-line treatment system is provided in Appendix B.

B. Scale Build-up

During the test period discussed above, KUCC monitored the build-up of pipe scale in the line at a series of test locations along the line. Observed rates of build-up are consistent with predictions made by KUCC using a semi-empirical model developed by Mr. Helmar Bayer for the Project.

Figure 3-17
PROCESS-WATER SCHEMATIC (Jun - Sep, 2001)

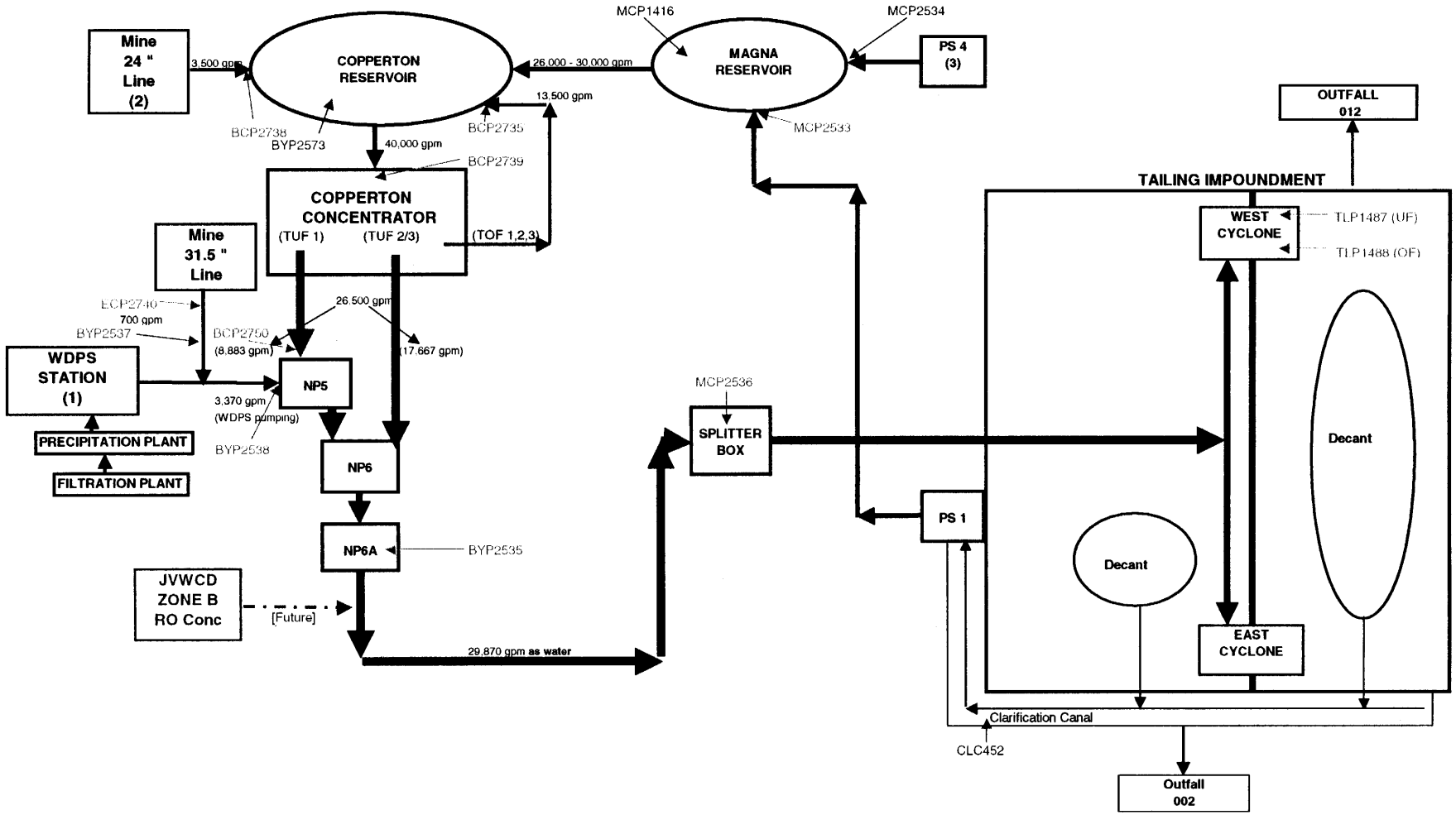

Figure 3-18
pH (s.u.) - 8/30/01

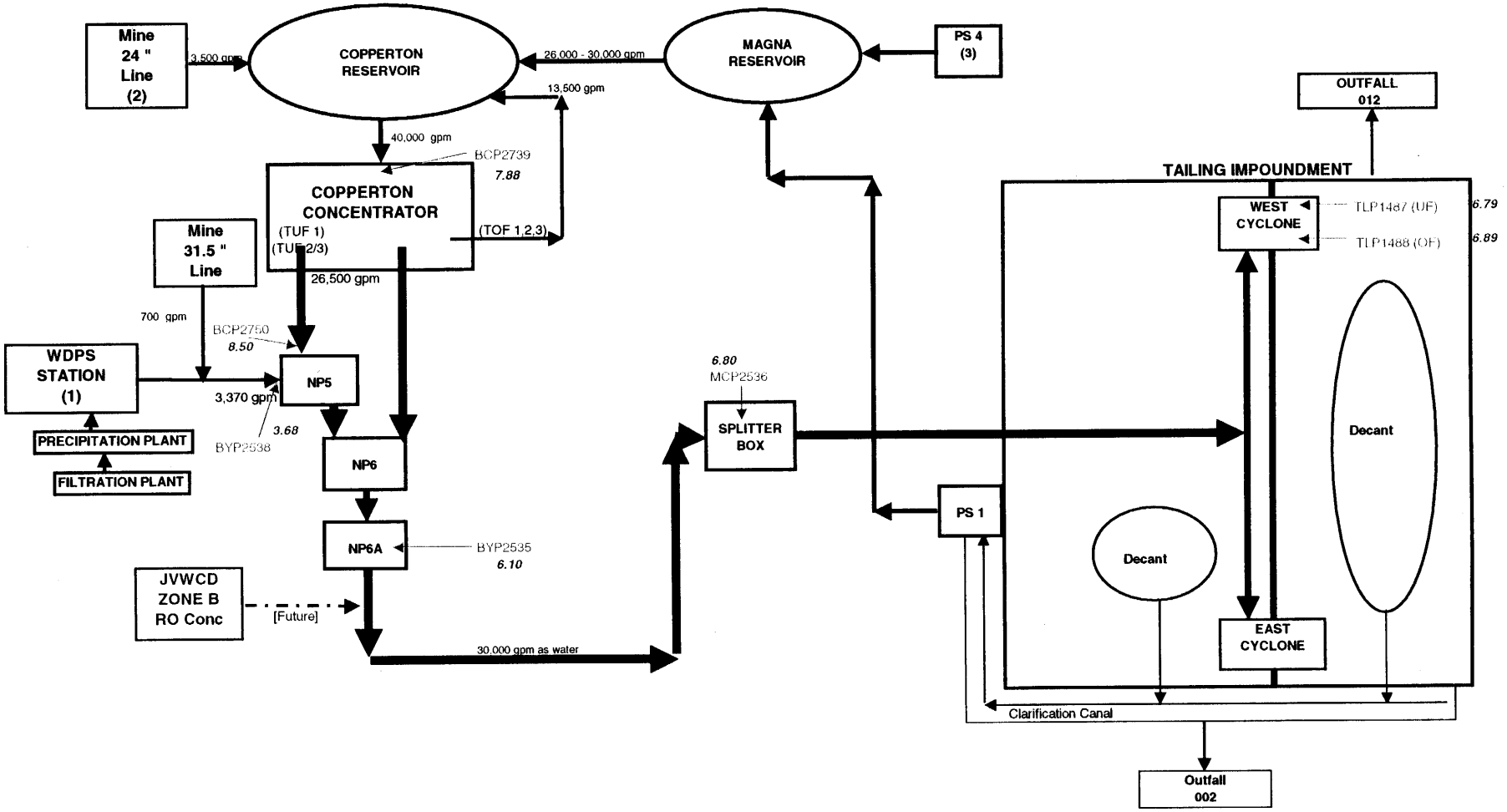

Figure 3-19
Cl (mg/L) - 8/30/01

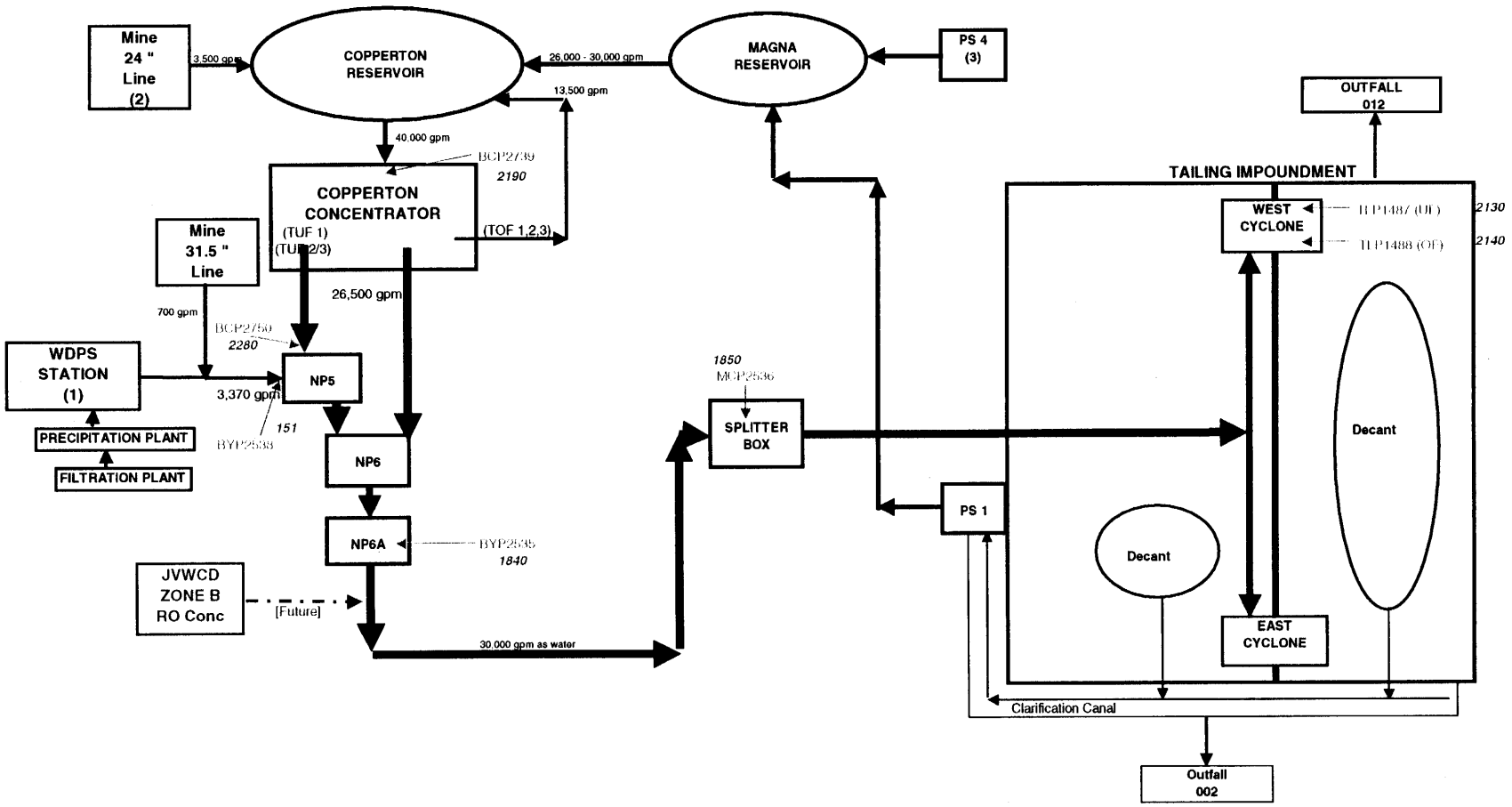

Figure 3-20
Ca (mg/L) - 8/30/01

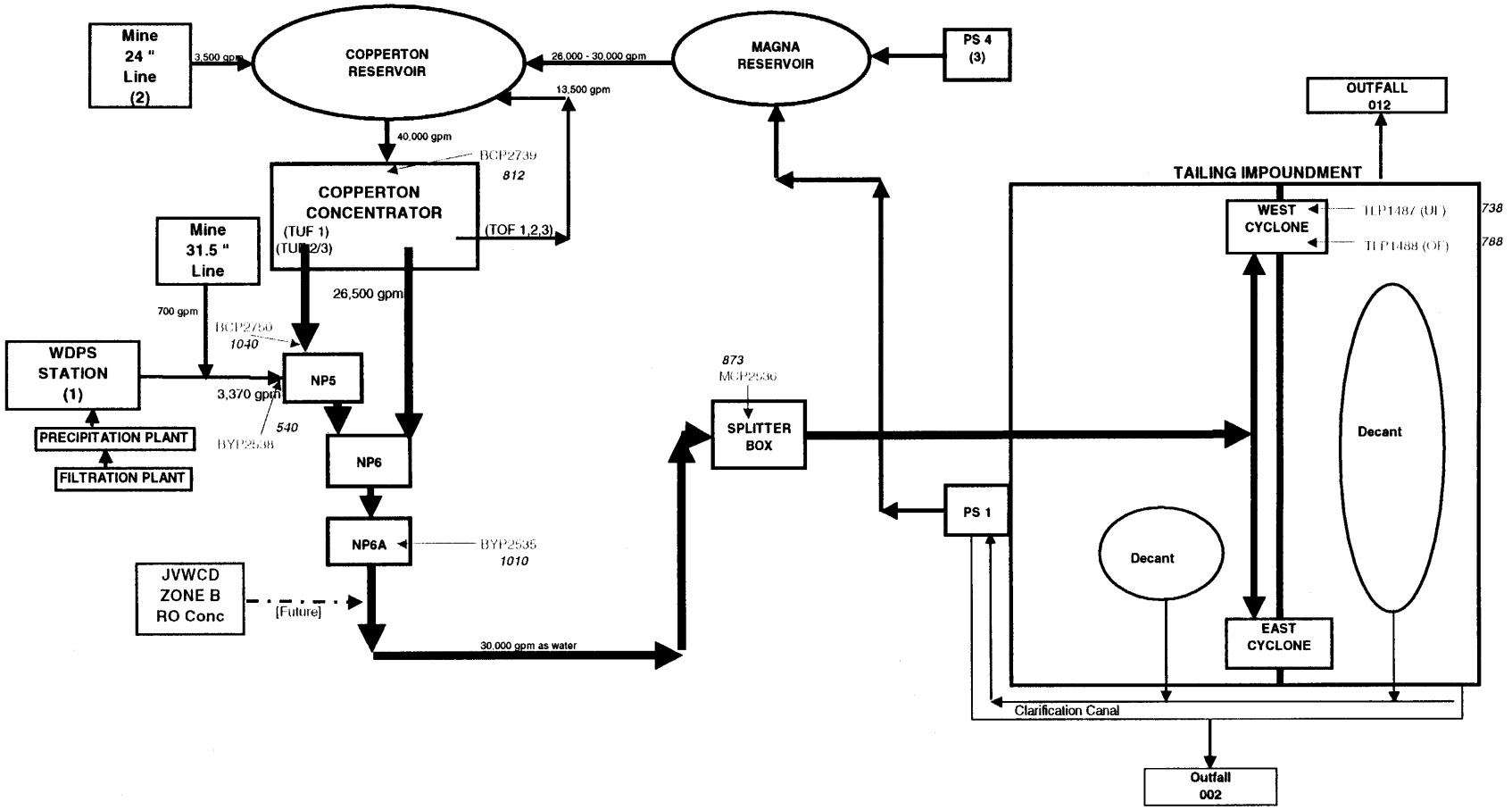

Figure 3-21
SO4 (mg/L) - 8/30/01

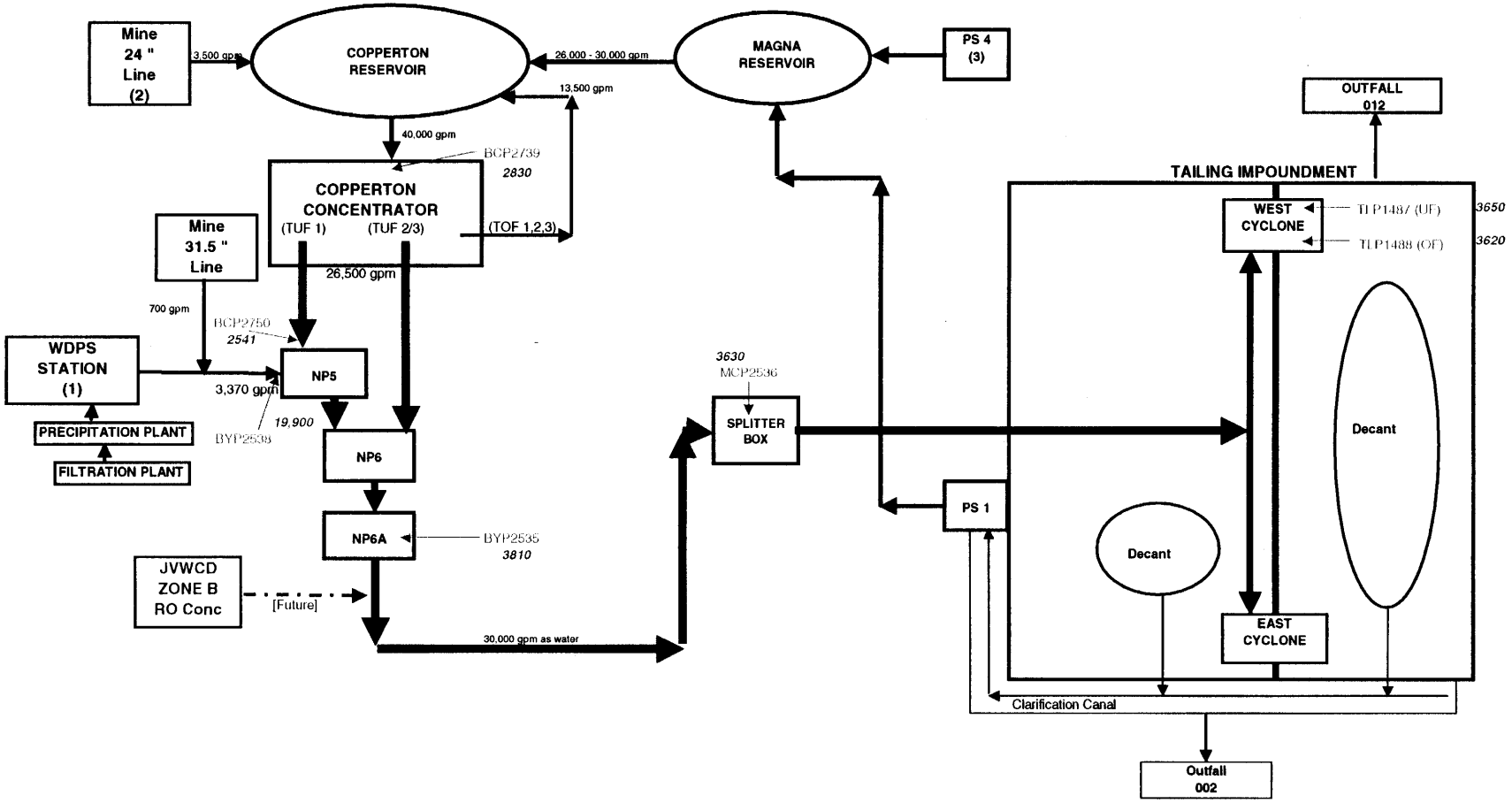

Figure 3-22
Al (mg/L) - 8/30/01

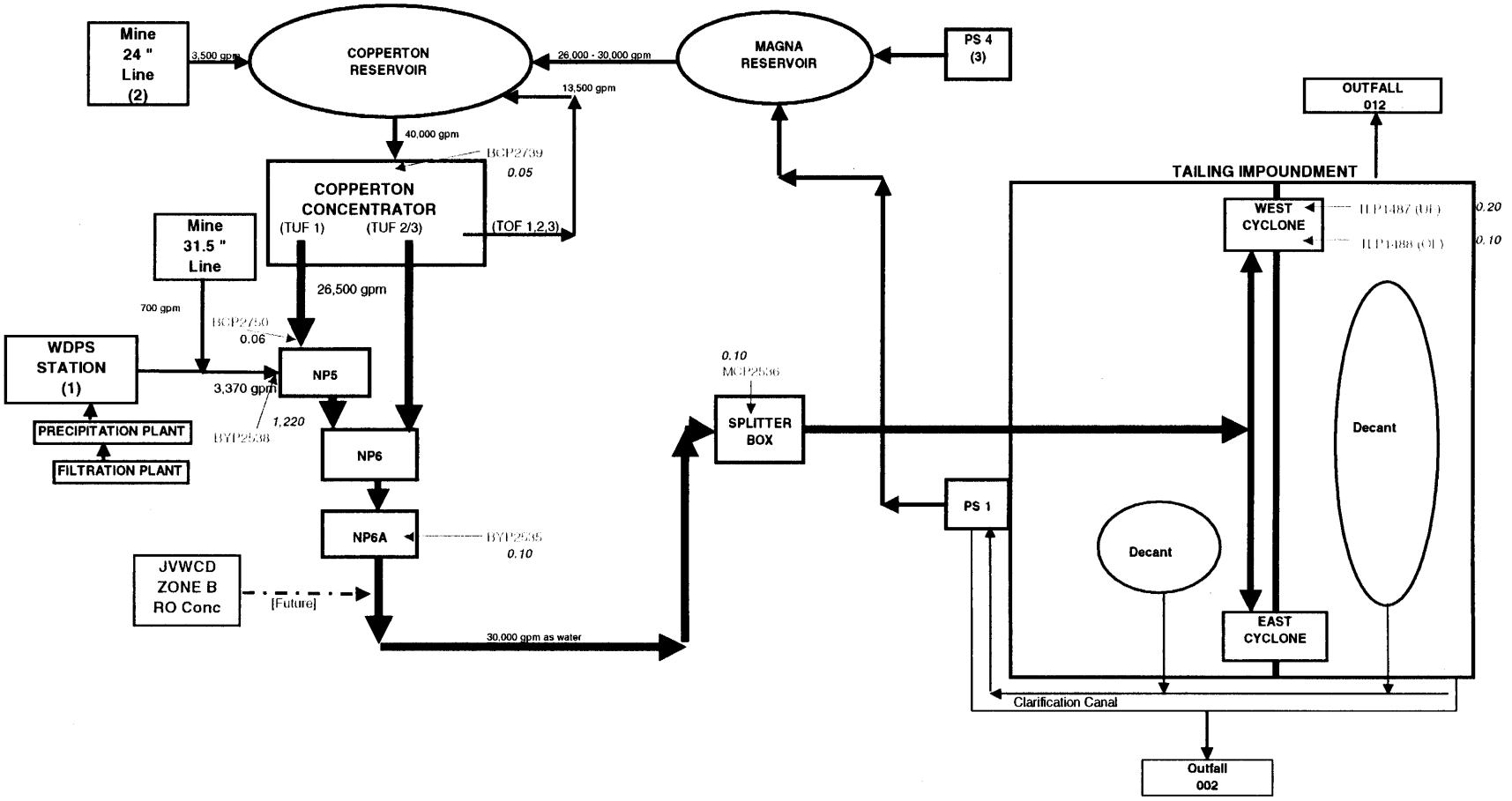

Mineralogical analysis of pipeline scale shows that approximately 80% of the solid mass is gypsum ($CaSO_4.2H_2O$) or other forms of calcium sulfate. Most of the remainder is tailing grains that have been trapped in the gypsum mass. Trace amounts of aluminum and iron hydroxide and silica are inferred from the mineralogy and the chemical data. Trace metals that are attenuated in the pipeline system are believed to be sorbed or co-precipitated with the aluminum and iron hydroxides.

3.5.2.5 Monitoring

For purposes of performance monitoring, KUCC proposes four monitoring steps:

- Daily pH monitoring at North Splitter Box (MCP2536). The pH at MCP2536 will be recorded daily as the arithmetic average of the pH measured after each shift's calibration of the device. The daily value will be recorded as a time-series graph using a Shewart-style control chart in which the control limits will be set using the Student's-t statistic on the first 30-days' data. In addition to plotting the data on the control chart, the plot will include the CUSUM statistic to identify trends in pH. The baseline value for CUSUM will be set as the mean of the first 30-days' data. KUCC will maintain the pH data in a reviewable database and will print the time-series control charts on a calendar-monthly basis, copies of which will be provided to EPA and the TRC with Quarterly monitoring reports.

- Monthly chemical monitoring at the monitoring points shown on Figure 3-16 for the following parameters: pH, TDS, Alkalinity/Acidity, Ca, Mg, Cl, SO4, Al, Cu, Fe, Mn, Zn.
- Monthly monitoring for Net Neutralization Potential (by GCMP standard methods) from General Mill Tailings and a grab sample from the North Splitter Box (MCP2536)
- UPDES discharge monitoring at Outfall 012.

In addition to the performance monitoring, KUCC may establish additional, operational sampling to help understand and control the tailing-discharge system. Such monitoring may be short- or long-term, and the establishment of such sampling does not constitute a commitment by KUCC to long-term sampling. While such sampling is on-going, KUCC will maintain the data in the project database, and those data will be available for TRC, State and EPA review.

3.5.3 Post-Mining Conditions

Because mining will continue until at least 2013 (and perhaps until 2030), it is not necessary at this time to have a plan for post-mining conditions that is developed to the same level of detail as that needed for operational conditions. By prior arrangement with EPA, KUCC will prepare a description of the post-mining treatment and management system at the level of a Preliminary Design in the Final Design Report, due in December 2002.

3.5.3.1 Performance Criteria

The post-mining management system will deliver water-treatment effluents and sludges to a designated repository. That repository may be the tailing impoundment (or a portion thereof), one of the mine pits on the KUCC property, or to an engineered facility on the KUCC property.

Fluids discharged from any post-mining water-management system will meet discharge criteria of existing permits set by UDEQ or other regulatory authority.

3.5.3.2 Project Delivery Strategy

KUCC will develop a Preliminary Design for the post-mining system by submission of the Final Design Report in December 2002. It is expected that the Preliminary Design for long-term management will include plans for additional testing and system development to be performed by KUCC during the initial years of the operational waste-management program for Zone A.

3.5.3.3 Preliminary Drawings

Preliminary plans, drawings and sketches for the post-mining system will be included in the Preliminary Design to be submitted in December 2002.

4.0 *PERMITS AND INSTITUTIONAL CONTROLS*

A permit requirement plan was included in the RDWP. Characterization of the nature, scope and duration of the proposed project and identification of applicable permitting requirements and required permits, are the initial steps in the sequential permitting process. To the extent that facilities associated with the Remedial Design are located on-site and are part of a CERCLA remedy, they are exempt from federal and state permitting requirements pursuant to CERCLA section 121(e)(1), which provides: "No Federal, State or local permit shall be required for the portion of any removal or remedial action conducted entirely on-site, where such remedial action is selected and carried out in compliance with this section." Based on comments received from various State and Federal agencies in correspondence and meetings, it has been determined that various permits and/or revisions to existing permits may be required. Based on this foundation, the next steps in the permitting process are:

- Identification and collection of required permit information
- Organization and presentation of the required information as permit application or revision submittals
- Application submittals
- Coordination with jurisdictional agencies during the permit review and approval process

The following sections summarize permit information requirements and timetables (where specified) for each jurisdictional agency and permit.

4.1 New Permits

4.1.1 Drinking Water Permit(s)

Because the RO membrane treatment facility will be producing drinking water that will be consumed by the public, the most rigorous application of the State Drinking Water Regulations (UAC R309-102) will be applied. Among other things, this will include submittal of Preliminary Evaluation Reports (PERs) and Source Protection Plans (SPPs) which must be approved by the State Division of Drinking Water (DDW). In addition, the RO treatment plant design and construction must be reviewed and approved by the DDW at which time KUCC will receive a permit to operate the facility as designed and provide drinking water to the JVWCD for distribution to affected communities.

4.1.2 County Conditional Use and Building Permit

Salt Lake County Code requires that a building permit be obtained before construction activities may commence on any building or structure. The Development Services Division of the Salt Lake County Department of Public Works is responsible for various aspects of development. It issues Salt Lake County approval for the construction of buildings or structures, inspects construction for compliance with building codes, and enforces building code requirements. The building permit is issued only after all zoning and conditional use requirements have been satisfied.

A Building Permit application will be generated for the RO treatment plant and must contain the Conditional Use information, a detailed site plan showing existing facilities and proposed improvements. The application must demonstrate that the building conforms to all applicable codes and that the building, structure and land use are consistent with zoning ordinances. Typical length of time to obtain a building permit ranges from two to five weeks, depending on the workload in the Development Services Division.

4.1.3 Construction Permit

R309-102-2 details the requirements that pertain to the construction of a public drinking water system. This section lists the approval process for engineering plans and specifications as well as acceptable design and construction methods. Complete plans and specifications for the system, as described in R309-102-2.3, will be approved in writing by the Executive Secretary prior to the commencement of construction. The regulations indicate that a 30 day review period should be assumed.

4.1.4 Well Drilling/Construction Permits

As shown in Table 3-1 of the RDWP, additional acid extraction wells will be constructed to the east of the current extraction well. Additional monitoring wells may also be necessary within and adjacent to the plume(s). Construction of these wells will follow current State rules (R655-4) which require well drilling permits and completion certificates.

4.2 Permit Modifications

4.2.1 UPDES Permit No. UTD0000051

KUCC's UPDES Permit was renewed and modified in May 2001 to include flows from deep wells 1193 and 109, the sulfate extraction and Lark wells and water from the acid extraction well into KUCC's process and wastewater systems. No changes in discharge parameters are expected due to these additions. Therefore, no additional modifications are believed necessary.

4.2.2 Air Emissions Permit

Other than controlling fugitive dust per State rule (R307-215) during construction activities, no air emissions are anticipated that would require an air permit from the UDEQ Division of Air Quality. As the remedial design progresses, potential air emission sources will be evaluated and communicated to UDEQ to determine if a permit is required.

4.2.3 Division of Oil, Gas and Mining (DOGM) - Notice of Intent

There are several reasons why the Zone A RO treatment plant and associated pipelines will not need to be included in KUCC's existing DOGM permitting and bonding. The Zone A treatment plant serves a dual purpose: 1) to meet the objectives of the NRD consent decree and CERCLA remediation and 2) to make municipal quality water for delivery to the affected communities. As such, it is not a "mining operation" as that term is defined in UCA 40-8-4(8). DOGM has requested, and KUCC has agreed, to provide DOGM with a copy of the joint agreement between KUCC and JVWCD upon finalization, which documents the long term funding for the operation and maintenance of this perpetual water treatment facility.

Impacts of concentrate disposal on the currently approved reclamation plan for the KUCC tailings impoundment (Permit M/035/015) are believed to be minimal. Section 3.5.5.1 discusses the performance criteria established for the integration of the RO concentrate and acidic solutions within the tailings disposal system. The system will be maintained with a minimum fluid pH of 6.7 or greater. Additionally, the NNP as calculated using the Modified Sobek Procedures of tailings discharge at the impoundment (which will include RO concentrate inflows) will be maintained such that they have an NNP and NPR that are equal to or higher than the GMT if the GMT is less than 10 t CaCO3/kt. Therefore, no degradation in tailings geochemistry that could affect the long term reclamation of the tailings is anticipated due to the addition of concentrate. KUCC will continue the geochemical studies and sampling program needed to support the Final Design. Should the studies or sampling indicate any negative consequences of the concentrate addition to the tailings circuit, that would have an impact on final reclamation of the impoundment, KUCC will address the issue with DOGM.

4.3 Groundwater Use Restrictions

Restrictions on the use of water from existing wells, restrictions on the installation of new wells and a moratorium on new water rights within and adjacent to the project area will be established through the State Engineer and Department of Water Resources as needed. KUCC has already

petitioned the State Engineer to implement the moratorium on new water rights that will minimize the effects of aquifer draw down and movement related to the containment and extraction remedial strategy approved in the ROD. KUCC is currently working with the largest extractors of water from the aquifer to manage the current over drafting situation that is occurring.

5.0 *DESIGN QUALITY CONTROL*

This is a unique remediation project and remedial design. The containment and extraction system were designed, installed and tested during the RI/FS process. The acid extraction well was installed and successfully tested at approximately 500 gpm. Currently the only additional construction associated with the acid plume containment will be new acid wells and associated piping and pumping systems to bring the total acid extraction to 2000 to 2500 gpm.

The containment wells for the sulfate have been in operation for several decades supplying process water to the Copperton concentrator. After the design and construction of the RO Plant, these wells will continue to be pumped, but will be routed to the RO plant rather than the concentrator. Since this system will be producing drinking water, the design and construction of this are subject to the review and approval of the UDEQ Division of Drinking Water as part of the process of obtaining a drinking water permit. To avoid duplicative oversight, the Division of Drinking Water will provide the primary review for this system as part of the overall remedial design.

QA/QC procedures will be implemented throughout the design process to ensure that the final design is technically sound, cost-effective, biddable, constructible and that the design meets the remedial action goals for the site. The following mechanisms will be used to assure that the remedial design is completed in a high quality manner.

- Criteria Committee Meetings
- Design checks at each design phase
- Operability reviews
- Constructability reviews.

Each quality check mechanism is summarized below. There are also specific procedures for checking and reviewing drawings, specifications, calculations and construction cost estimates and schedules.

5.1 **Criteria Committee Meetings**

Criteria Committee Meetings (CCMs) are internal (KUCC) project review meetings with both the KUCC project management team and KUCC Engineering Services. The first CCM will be held following the completion of the Remedial Design Work Plan to set appropriate criteria and directions for the work. A second CCM will be held prior to completion of the Preliminary Design to provide continued input throughout the project. The idea is to obtain input from experienced individuals at critical junctures in the remedial design. The objective of the meetings is to critically review the direction, criteria, budget and schedule of the projects.

5.2 Design Checks

Design Checks are crucial to the overall success of the remedial design process and will consist of the following:

5.2.1 Preliminary Design Check

The Preliminary Design Check will be performed by KUCC or an independent third party who will review the design criteria, the preliminary monitoring plan, permit requirements, institutional control plans and check and approve drawings. This check also will review specifications, cost estimates and schedule. Following the Preliminary Design Check, the Preliminary Design will be submitted to the TRC for review.

5.2.2 95 Percent Design Check

KUCC or an independent third party will perform the 95 Percent Design Check at the point of the Draft Final Design. This check will be accomplished by having a senior person within each discipline review the calculations, specifications and drawings for that aspect of the design. This check also will review detailed construction cost estimates and schedule. The reviewer(s) will verify that design changes are technically sound and do not compromise the integrity of the project or create a potential safety hazard. After the reviewer(s) verify that any changes have been incorporated into the drawings, specifications, design analysis and cost estimate, a final check and approval of drawings will be completed. This information will then be incorporated into the draft Final Remedial Design and will be submitted to the TRC for review.

5.3 Operability Review

Following the Preliminary Design, KUCC or an independent third party will complete an operability review. The review will determine if the facilities can be operated and maintained with a reasonable level of effort, and without creating a health and safety hazard for the operators. The review will be performed by an individual with experience in the startup and/or operation of similar facilities.

5.4 Constructability Review

Following the Preliminary Design, KUCC or an independent third party will conduct a constructability review. The review will focus on the ability to execute the work described, conflicts between the specifications and drawings and the ability to complete the project within the time frame allotted.

6.0 PROGRESS MEETINGS AND REPORTS

6.1 Quarterly Progress Meetings

During the remedial design phase (and continuing through the remedial action phase), quarterly status meetings will be held with EPA and UDEQ to discuss the progress of the work. Most of the meetings will be conducted by conference call. The first meeting will be held during 1Q 2002. The following items will be covered in each meeting:

- Activities performed
- Significant findings
- Problems and corrective measures taken
- Quality assurance/quality control activities and findings
- Coordination issues impacting the work
- Significant future activities.

Minutes from the meetings will be prepared and distributed to those participating in the meeting within four weeks of the meeting.

6.2 Progress Reports

A written progress report will be prepared and submitted by KUCC to EPA and UDEQ on or by the 15 day of each quarter to document the activities of the previous quarter. The report will address the following topics:

- Progress made in relation to master schedule
- Problems identified
- Problems resolved
- Deliverables submitted
- Schedule updates
- Activities planned for the next twelve weeks.

6.3 TRC Meetings

TRC meetings will be on an as-needed basis (likely semi-annually) to discuss the progress of the project or to discuss significant changes in scope to the project. The first TRC meeting regarding the Preliminary Design was held on October 30, 2001. At this time the next TRC meeting is scheduled for mid 2002 to discuss progress of design and construction.

7.0 SCHEDULE FOR REMEDIAL DESIGN ACTIVITIES

7.1 Summary of Deliverables

A list of various deliverables to be submitted during the remedial design phase is shown on Table 7-1. The table also provides the current status of each deliverable.

Two bound copies of each deliverable will be submitted to EPA and UDEQ. One copy of various deliverables will be submitted to specific members of the TRC based upon area of oversight and expertise.

7.2 Schedule

- The schedule for completing the scope of the RD is shown in Figure 7-1. This is a modified version of the schedule presented in the RDWP. To provide an overall picture of the time frame required to implement the remedy, a preliminary schedule for field activities assumes that favorable weather conditions will exist at the time of work. If this is not the case, the schedule will be adjusted to accommodate weather conditions.

- The schedule shown in Figure 7-1 is aggressive and optimistic. A concerted effort by all parties will be necessary to meet the deadlines shown. This will entail frequent communication to discuss progress on deliverables and major issues, making sure that the first drafts of documents are as complete as possible. In addition to these efforts, it also will be necessary to prioritize the various deliverables and allow those designated as a lower priority to slip until after the critical path deliverables are complete. As the project progresses, the priorities will be revisited and, if necessary, the schedule will be revised to assure that the critical path tasks are being given the highest priority.

Table 7-1. SUMMARY OF REMEDIAL DESIGN PHASE DELIVERABLES

Document Name	Status
Draft Remedial Design Work Plan	Completed 4-6-01
Final Remedial Design Work Plan	Completed 8-6-01
Draft Data and Records Management Plan	Completed 10-30-01
Final Data and Records Management Plan	Pending
Draft Work Plan for Tailings Geochem Study	Completed 8-27-01
Final Work Plan for Tailings Geochem Study	Pending
Draft Work Plan for Groundwater Study	Completed 8-24-01
Final Work Plan for Groundwater Study	Pending
Draft Groundwater Monitoring Plan	Completed 8-14-01
Final Groundwater Monitoring Plan	Pending
Draft Water Treatment Plan	Completed 10-19-01
Final Water Treatment Plan	Pending
Draft Report for Tailings Geochem Study	Pending – See Schedule Figure 7-1
Final Report for Tailings Geochem Study	Pending – See Schedule Figure 7-1
Draft Report for Groundwater Study	Pending – See Schedule Figure 7-1
Final Report for Groundwater Study	Pending – See Schedule Figure 7-1
Annual Groundwater Monitoring Report (2Q01)	Pending – See Schedule Figure 7-1
Annual Groundwater Monitoring Report (2Q02)	Pending – See Schedule Figure 7-1
Draft Report for Water Treatment	Pending – See Schedule Figure 7-1
Final Report for Water Treatment	Pending – See Schedule Figure 7-1
Preliminary Remedial Design	Completed 1-31-01
Final Remedial Design	Pending – See Schedule Figure 7-1

ID	Task Name	Duration	Start	Finish
1	**Prepare Remedial Design Work Plan**	139 days	Tue 2/20/01	Fri 8/31/01
2	Prepare Draft RDWP	33 days	Tue 2/20/01	Thu 4/5/01
3	Submit Draft RDWP to TRC	1 day	Fri 4/6/01	Fri 4/6/01
4	Comments on Draft RDWP due Apr 30	49 days	Mon 4/9/01	Thu 6/14/01
5	Prepare and Submit Final RDWP	37 days	Fri 6/15/01	Mon 8/6/01
6	Agency Review/Approval of Final RDWP	114 days	Tue 8/7/01	Fri 1/11/02
7				
8	**Execute Tailings Geochem Study**	372 days	Fri 6/29/01	Mon 12/2/02
9	Prepare Draft Tailings Geochem Study Report	87 days	Fri 5/31/02	Mon 9/30/02
10	Submit Draft Tailings Geochem Study Report for Agency Review	23 days	Tue 10/1/02	Thu 10/31/02
11	Prepare Final Tailings Geochem Study Report	21 days	Fri 11/1/02	Sat 11/30/02
12	Submit Final Tailings Geochem Study Report to TRC	1 day	Mon 12/2/02	Mon 12/2/02
13				
14	**Execute Groundwater Studies**	283 days	Mon 4/2/01	Wed 5/1/02
15	Prepare Draft Groundwater Studies Report	152 days	Wed 8/1/01	Thu 2/28/02
16	Submit Draft Groundwater Studies Report for Agency Review	22 days	Fri 3/1/02	Mon 4/1/02
17	Prepare Final Groundwater Studies Report	21 days	Tue 4/2/02	Tue 4/30/02
18	Submit Final Groundwater Studies Report to TRC	1 day	Wed 5/1/02	Wed 5/1/02
19				
20	**Execute Water Treatment Studies**	372 days	Fri 6/29/01	Mon 12/2/02
21	Prepare Draft Water Treatment Study Report	87 days	Fri 5/31/02	Mon 9/30/02
22	Submit Draft Water Treatment Study Report for Agency Review	23 days	Tue 10/1/02	Thu 10/31/02
23	Prepare Final Water Treatment Study Report	21 days	Fri 11/1/02	Fri 11/29/02
24	Submit Final Water Treatment Study Report to TRC	1 day	Mon 12/2/02	Mon 12/2/02
25				
26	**Prepare Design Submittals**	413 days	Fri 6/1/01	Tue 12/31/02
27	Prepare Preliminary Design Submittal	91 days	Thu 9/27/01	Thu 1/31/02
28	Preliminary Design TRC Meeting	1 day	Tue 10/30/01	Tue 10/30/01
29	Submit Preliminary Design to TRC	1 day	Fri 2/1/02	Fri 2/1/02
30	Obtain Required Permits	239 days	Thu 1/31/02	Tue 12/31/02
31	Prepare Final Design Submittal	238 days	Mon 2/4/02	Wed 1/1/03
32	Final Design TRC Meeting	1 day	Fri 12/13/02	Fri 12/13/02
33	Submit Final Design to TRC	1 day	Tue 12/31/02	Tue 12/31/02
34				
35	**Construction and Operation of Zone A RO Plant**	784 days	Tue 1/1/02	Fri 12/31/04
36	Phase I	784 days	Tue 1/1/02	Fri 12/31/04
37	Phase II	610 days	Mon 9/2/02	Fri 12/31/04
38	Phase III	500 days	Mon 2/3/03	Fri 12/31/04

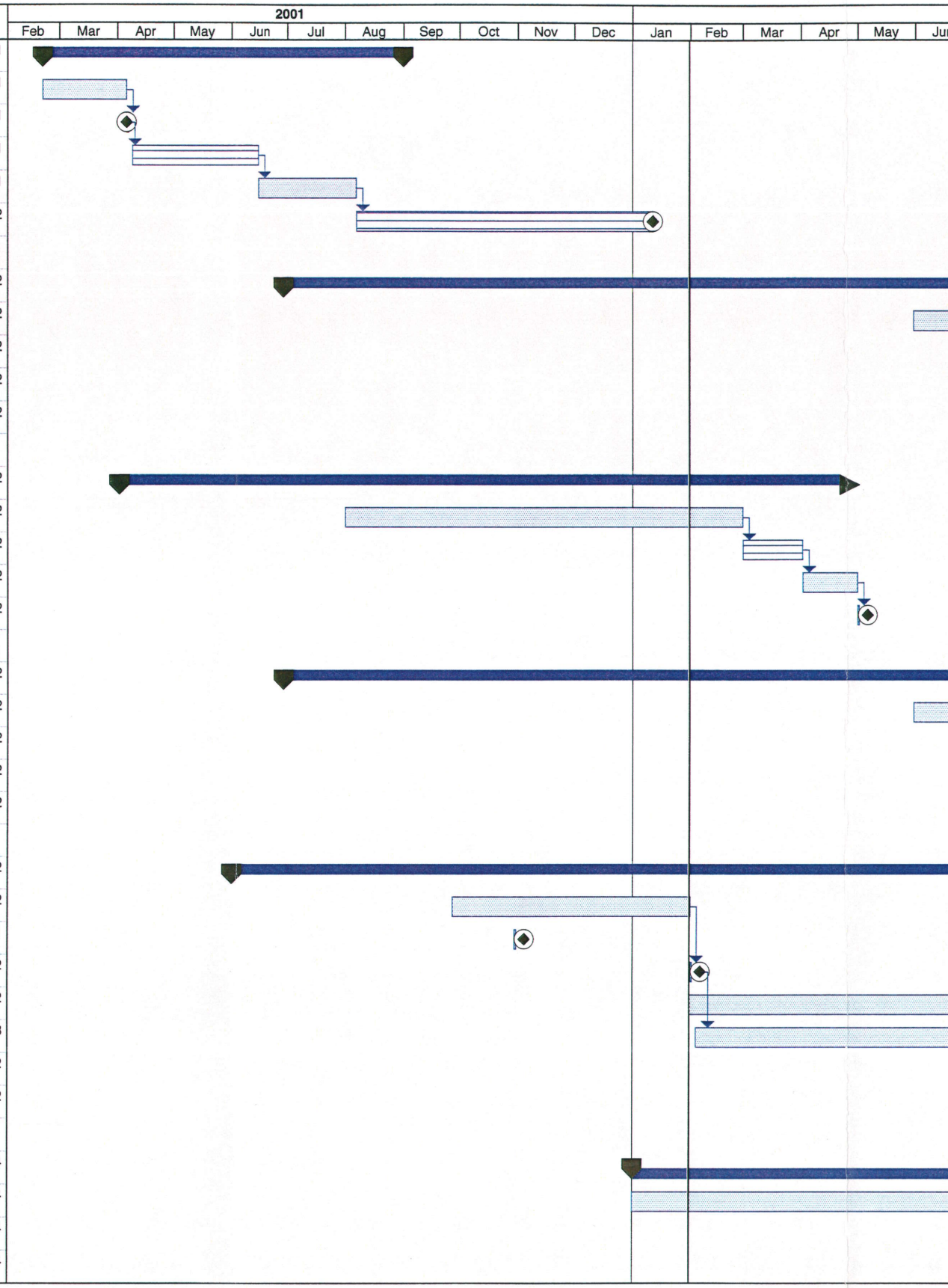

Project: SOUTH FACILITIES RDWP
Date: Thu 1/31/02

Task
Milestone
Rolled Up Task
Rolled Up Progress
Project Summary
Rolled Up Split
Progress
Summary
Rolled Up Milestone
External Tasks
Split

ID	Task Name	Duration	Start	Finish
1	**Prepare Remedial Design Work Plan**	139 days	Tue 2/20/01	Fri 8/31/01
2	Prepare Draft RDWP	33 days	Tue 2/20/01	Thu 4/5/01
3	Submit Draft RDWP to TRC	1 day	Fri 4/6/01	Fri 4/6/01
4	Comments on Draft RDWP due Apr 30	49 days	Mon 4/9/01	Thu 6/14/01
5	Prepare and Submit Final RDWP	37 days	Fri 6/15/01	Mon 8/6/01
6	Agency Review/Approval of Final RDWP	114 days	Tue 8/7/01	Fri 1/11/02
7				
8	**Execute Tailings Geochem Study**	372 days	Fri 6/29/01	Mon 12/2/02
9	Prepare Draft Tailings Geochem Study Report	87 days	Fri 5/31/02	Mon 9/30/02
10	Submit Draft Tailings Geochem Study Report for Agency Review	23 days	Tue 10/1/02	Thu 10/31/02
11	Prepare Final Tailings Geochem Study Report	21 days	Fri 11/1/02	Sat 11/30/02
12	Submit Final Tailings Geochem Study Report to TRC	1 day	Mon 12/2/02	Mon 12/2/02
13				
14	**Execute Groundwater Studies**	283 days	Mon 4/2/01	Wed 5/1/02
15	Prepare Draft Groundwater Studies Report	152 days	Wed 8/1/01	Thu 2/28/02
16	Submit Draft Groundwater Studies Report for Agency Review	22 days	Fri 3/1/02	Mon 4/1/02
17	Prepare Final Groundwater Studies Report	21 days	Tue 4/2/02	Tue 4/30/02
18	Submit Final Groundwater Studies Report to TRC	1 day	Wed 5/1/02	Wed 5/1/02
19				
20	**Execute Water Treatment Studies**	372 days	Fri 6/29/01	Mon 12/2/02
21	Prepare Draft Water Treatment Study Report	87 days	Fri 5/31/02	Mon 9/30/02
22	Submit Draft Water Treatment Study Report for Agency Review	23 days	Tue 10/1/02	Thu 10/31/02
23	Prepare Final Water Treatment Study Report	21 days	Fri 11/1/02	Fri 11/29/02
24	Submit Final Water Treatment Study Report to TRC	1 day	Mon 12/2/02	Mon 12/2/02
25				
26	**Prepare Design Submittals**	413 days	Fri 6/1/01	Tue 12/31/02
27	Prepare Preliminary Design Submittal	91 days	Thu 9/27/01	Thu 1/31/02
28	Preliminary Design TRC Meeting	1 day	Tue 10/30/01	Tue 10/30/01
29	Submit Preliminary Design to TRC	1 day	Fri 2/1/02	Fri 2/1/02
30	Obtain Required Permits	239 days	Thu 1/31/02	Tue 12/31/02
31	Prepare Final Design Submittal	238 days	Mon 2/4/02	Wed 1/1/03
32	Final Design TRC Meeting	1 day	Fri 12/13/02	Fri 12/13/02
33	Submit Final Design to TRC	1 day	Tue 12/31/02	Tue 12/31/02
34				
35	**Construction and Operation of Zone A RO Plant**	784 days	Tue 1/1/02	Fri 12/31/04
36	Phase I	784 days	Tue 1/1/02	Fri 12/31/04
37	Phase II	610 days	Mon 9/2/02	Fri 12/31/04
38	Phase III	500 days	Mon 2/3/03	Fri 12/31/04

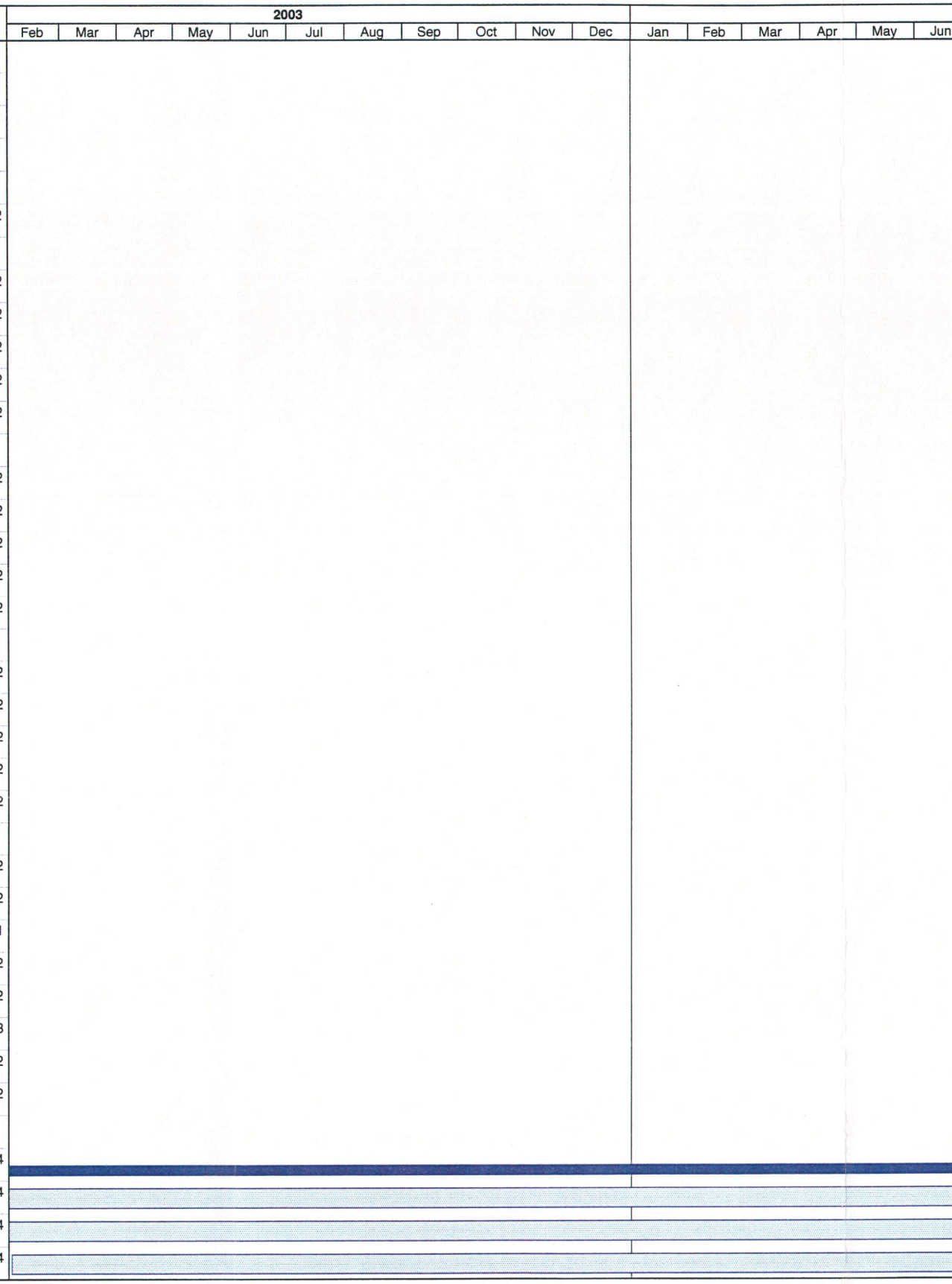

Project: SOUTH FACILITIES RDWP
Date: Thu 1/31/02

Task
Progress
Milestone
Summary
Rolled Up Task
Rolled Up Milestone
Rolled Up Progress
External Tasks
Project Summary
Split
Rolled Up Split

8.0 REFERENCES

Kennecott Utah Copper (KUCC), 1998a, Final draft remedial investigation report for KUCC south facilities groundwater plume, southwest Jordan Valley, Utah. Version B, March, 1988, variously paged.

Kennecott Utah Copper (KUCC), 1998b, Final draft feasibility study report for KUCC south facilities groundwater plume, southwest Jordan Valley, Utah. Version B, March, 1988, variously paged.

Environmental Protection Agency and Utah Department of Environmental Quality, 2000, Record of Decision, KUCC South Zone, Operable Unit 2, Southwest Jordan River Valley Groundwater Plumes, December 13, 130 p.

Kennecott Utah Copper Corporation, 1999a, Standard Operating Procedures for Water Sampling, Version 4, December, 309 p.

Kennecott Utah Copper Corporation, 1999b, Quality Assurance Project Plan for the Groundwater Characterization and Monitoring Plan, Revision 5, December, 29 p.

Kennecott Utah Copper Corporation, 2000, Groundwater Characterization and Monitoring Plan, revision 6, April, 91 p.

Kennecott Utah Copper Corporation, 2001, Data and Records Management Plan for the KUCC South Facilities Groundwater Remedial Design - Version A. October 30.

Shepherd Miller, Inc., 1997, Determination of Constituents Above Background and Baseline Concentrations in Groundwater, Southwestern Jordan Valley, Utah. June, 51 p. plus appendices. (Included as Appendix B to the Remedial Investigation and Feasibility Study Report, KUCC, 1998)

APPENDIX A

APPENDIX A

TIME-SERIES WATER CHEMISTRY - PROCESS CIRCUIT

MAY – OCTOBER, 2001

Appendix A

Time-Series Water Chemistry Along Process Circuit
May – October, 2001

Notes on Time-Series Data:

1. "VALUE!" means that the sample was tested and found at less than the listed detection limit. (Detection limit, from GCMP, at top of column)
2. Blank entries mean not tested.
3. PEND means results not yet received through KEL quality assurance.

INTERIM EVALUATION MEMORANDUM

DATE: 10 October 2001

TO: **Jon Cherry (KUCC)**

FROM: Mark J. Logsdon (Geochimica)

SUBJECT: **GEOCHEMICAL STABILITY IN TAILING-LINE TREATMENT SYSTEM AS PART OF THE SOUTH FACILITIES REMEDIAL PROGRAM**

cc: *D. Blowes (Waterloo); J. Jambor (LRC); U. Mayer (UBC); B. Vinton (NAE-KUCC); R. Borden (KUCC); H. Bayer (HGB –KUCC)*

EXECUTIVE SUMMARY

Problem: *Decreased neutralization potential of tailing solids and increased flows of acidic waters, compared to 1997 assumptions, imply that the tailing line can be used for treatment of acidic flows only if KUCC adds approximately 300 tpd of additional lime (CaO). The calcium from this lime addition will react with sulfate in the acidic waters to precipitate large volumes of gypsum scale in the tailing pipeline that will require on-going maintenance.*

Conclusion: *The additional lime usage is fixed by (a) the total acidity of the flows needed to meet CERCLA commitments and (b) the reduced neutralization potential of tailing. KUCC could avoid almost all pipeline scale by (a) eliminating the nanofiltration treatment step and (b) treating the acidic flows with lime before the tailing line. During operations, the line still could be used to transport the sludge (mixed with tailing) to the Magna tailing impoundment. KUCC always has planned lime treatment for post-mining water-treatment. Modifying the plan to include lime treatment from the beginning of Remedial Action moves the start-up of this phase forward, but does not fundamentally change the remedial plan.*

Summary of Interim Geochemical Memorandum No. 1

KUCC's Remedial Design team has completed an interim evaluation of the tailing-line treatment system in light of recent geochemical data for the process circuit from the Copperton Concentrator to the North Impoundment. This evaluation:

- Reviews the original technical basis for geochemical treatment in the tailing line;
- Identifies changes to the assumptions of the original studies;
- Presents recent geochemical data for the Copperton tailing line;
- Evaluates those data through mass-balance modeling;
- Discusses the implications of the current geochemical evaluations for the Remedial Design.

Basis For Tailing-Line Treatment

The original technical investigation in 1997 assumed that (a) flow of acidic water would be 250 gpm and (b) the tailing (at a slurry flow rate of 40,000 gpm) would have a net neutralization potential of + 30 ton $CaCO_3$/kton. Under the test conditions, adequate treatment (i.e., acid neutralization and metals attenuation) without excessive pipeline scale could be achieved for any system in which the ratio of slurry to acidic water was at least 40:1 (equivalent to a flow of 1000 gpm acidic water). Because the apparent ratio was 160:1 (i.e., 40,000 gpm slurry: 250 gpm acid water), the investigation concluded that there was an adequate factor of safety for treatment using the Copperton tailing system.

Changed Conditions

Since the original investigations, the design-basis flow of acid plume water has increased to 2,500 gpm in order to remove mass of contaminants and restore the ground-water quality in a timely manner consistent with the intent and requirements of the Record of Decision. (Flow of acid-plume water would increase from the current flow rates of approximately 500 gpm in several steps during the Remedial Action, rather than jump immediately to the full 2500 gpm rate.) In addition, with the cessation of leaching, there now is a draindown and meteoric flow of approximately 1,000 gpm of acidic, high TDS water routed through the Eastside Collection System that also reports to the Copperton Tailing Line. Thus, the design-basis flow of acidic water now is approximately 3,500 gpm. For a total slurry flow of 40,000, this is a ratio of approximately 11 (slurry) : 1 (acidic water), not the 160:1 ratio that was assumed in the initial study and well below the minimum treatment value of 40:1 proposed by the 1997 study.

Furthermore, since 1997, there has been a long-term decline in the net neutralization potential (NNP) of the Copperton tailing, associated with the change in mining from ores that were high in $CaCO_3$ to those on the north and northeast side of the pit that are high in quartzite. Of nine monthly samples collected by KUCC in 2001, seven had NNP ≤ 0, and the most recent sample (Sep, 2001) had a value of - 42 $tCaCO_3$/kt. Thus, the intrinsic neutralization potential of the tailing on which the 1997 test work relied has not proven to be available consistently. Estimates of future NNP, based on the current mine-plan, project low NNP for several years, at least.

Current (3rd Quarter, 2001) Operation of the System

During the study leading to this memorandum (25 May to 25 Sep, 2001), acid-plume water was pumped at 500 – 550 gpm. This flow was treated in the project's nanofiltration (NF) plant, producing water-treatment concentrates at a flow rate of approximately 340 gpm[1].

[1] Performance of membrane filtration systems, including the nanofiltration (NF) apparatus operated during this test period, depends on chemistry of the influent waters. Under the operating conditions for this period, permeate (clean-water) recoveries varied from about 30% to about 50% (Helmar Bayer, HGB/KUCC, personal communication, 16-Oct-01), with the most common recovery rates near 35% of total inflow from the acid plume. Therefore, the concentrate production would have ranged from 70% to 50%, with a best-estimate value of 65%. For a range of untreated acid-plume water of 500 gpm to 550 gpm, the rate of concentrate flows would be from 250 gpm (i.e., 50% of 500 gpm) to 385 gpm (30% of 550 gpm), with a best estimate value of

The concentrations of dissolved species (and acidity) in the concentrates are approximately 1.5 times the concentrations in the acid-plume waters (see Footnote 1), so the amount of alkalinity needed to neutralize the pH of the NF concentrates is equivalent to that needed to neutralize the higher-flow, but lower-acidity, acid-plume water as pumped from the aquifer. The NF concentrate reports to the tailing line via the Precipitation Plant and the Wastewater Disposal Pump Station (WDPS), which also routes the acidic flows from the Eastside Collection System. In order to meet UPDES discharge permit limitations on dissolved metals for flows from the tailing impoundment, it is necessary to maintain pH $\geq$ 6.8 in the tailing line. Under operational conditions for the Third Quarter of 2001, KUCC controls the pH in the tailing line by one of two methods: (a) addition of lime (CaO)[2] or (b) limiting the flow of acid-plume water.

Results of Mass-Balance Evaluation

Mass-balance modeling of the current system (taken to be a nominal 500 gpm, or 20-25% of design-basis extraction rate for acid-plume water) using data collected from this program shows:

- 48% of the total sulfate load to the process circuit originates in flows from the WDPS. The remaining 52% of the sulfate is associated with the high-flow, low-sulfate waters of the Copperton Reservoir that are the make-up water for the Copperton tailing slurry.
- 66% of the total sulfate load to the WDPS is provided by the ECS flows. This is 32% of the load to the entire circuit.
- Under current conditions, the NF flows account for only 10% of the total sulfate load to the process circuit.
- If sulfate were conservative in the process circuit, the observed concentration from NP-6 (where the high SO_4 flow joins the tailing line) to the discharge points at the tailing impoundment would be 4,636 mg/L. The observed concentration at discharge is 3,635 mg/L. The 22% decrease in sulfate through the circuit is due to precipitation of gypsum, the primary mineral phase of the pipeline scale. Note, however, that, even with the gypsum precipitation, the SO_4 concentrations downstream of NP-6 are 40% to 50% higher than those upstream of NP-5 (e.g., SO_4 at NP-5: 2,541 mg/L; at NP-6A: 3,810 mg/L; at North Splitter Box: 3,630 mg/L).
- Most of the gypsum precipitation (83% of the apparent reduction in SO_4 concentration compared to the theoretical 4,636 mg/L) occurs between drop boxes NP-5 and NP-6A based on both the data of this study and observations of KUCC Engineering Services during de-scaling exercises in 2000 and 2001. In this reach, (a) the high-SO_4, acidic flows from WDPS join the line; and (b) KUCC has ability to add CaO to neutralize the acidity.

---

340 gpm (35% of 525 gpm). In subsequent discussions and calculations in this memorandum, we will assume that NF concentrate has a nominal flow of 340 gpm, with a mass-concentration factor of 1.54.

[2] It is important to distinguish chemical lime (CaO) from limestone ($CaCO_3$, the mineral calcite that constitutes the majority of the rock limestone). In colloquial usage, both limestone fines and slightly hydrated CaO-$Ca(OH)_2$ mixtures are sometimes referred to as "ag lime". In this memorandum "lime" always will mean CaO, and in most places the chemical formula will be used in preference to the word, to avoid ambiguity.

- There is essentially no change in concentration of any component from the North Splitter Box to the Cyclones. Neutralization is complete, as is essentially all gypsum precipitation and metals attenuation, in the upper part of the pipeline system.

Implications for Treatment and Scaling

Calculations using the mass-balance model show that, if acid-plume flows of 500 gpm (without nanofiltration treatment) were the only flow of acidic water into the system, the tailing system would produce a total sulfate concentration of less than 3,200 mg/L. Operational experience during this test period shows that the pH could be maintained with modest lime additions. Earlier KUCC studies (conducted in the mid- to late-1980's) show that, at this sulfate concentration, pipeline scale would be a negligible problem. The results of the June-September 2001 test confirm the projections of the 1997 study: if acid-plume or ECS water at flows of less than or equal to 500 gpm (which would be an 80:1 ratio) were the only water to be treated, the tailing system plan could be implemented with little or no risk, provided the tailing had neutralization potentials in the historic range.

However, if acid-plume water needs to be treated at 2500 gpm and there also is flow from the Eastside and Westside collection systems, then the expected sulfate concentration in the tailing line at NP-6A would be approximately 4,600 mg/L. This is a sulfate concentration that previous KUCC investigations have shown has potential of forming significant volumes of scale in the pipeline. In addition to the higher sulfate concentrations, there would be a substantially higher cumulative acidity. Calculations by KUCC contractors indicate that these combined flows would require approximately 325 tpd of CaO to neutralize to pH near 7. The addition of this much lime would cause significant precipitation of gypsum, much of which would accumulate as pipeline scale.

Alternatives for Treatment

Limiting the total flow of acid-plume water to 500 gpm is not a viable remedial design option, given commitments under CERCLA and the NRD settlement. In any event, the flow of other acidic waters from the waste-rock collection systems also needs to be considered. This study reviews alternative approaches to handling the total acidic flows. The two most plausible options are:

- Use the tailing line for the full flow, supplementing the available neutralization potential of the tailing with CaO to control pH and dealing with scale as it forms. KUCC Engineering Services have a plan for de-scaling the tailing line, and the engineering challenges of the lime-treatment system can be overcome, at cost to KUCC.
- Develop a lime-treatment system to address acidic flows from the waste-rock collection systems plus the acid plume. The lime treatment would occur **before** flow reaches the tailing line. (In detail, this option would use the available neutralization potential of the tailing to treat a portion of the acidic flows in order to minimize CaO usage and cost.) The neutralized waste stream and its sludges could be added to the tailing system for convenient disposal in the tailing impoundment without incurring additional neutralization burden or scale buildup in the line. KUCC already

has plans for lime treatment as the long-term (i.e., post-mining) alternative for management of acid flows.

In either case, gypsum precipitation can be limited by using acid-plume water without nanofiltration concentration. Lime (CaO) usage for neutralization would be equivalent with or without nanofiltration.

Ongoing Geochemical Evaluations

Ongoing studies to further evaluate these issues include:

- Continuing data collection and geochemical analysis of flows in the process circuit;
- Mineralogical evaluation of tailing, including reaction products through the process circuit and onto the tailing impoundment and its embankments;
- Evaluation of acid-base balance of tailing from their production in the Copperton Concentrator (the General Mill Tailings [GMT]) to their final disposal in the Magna impoundments.
- Water- and mass-balance modeling of the WDPS and process circuit systems;
- Chemical and engineering studies of lime-treatment systems, including chemical evaluations of the nature of the lime-treatment sludges and the overflow solutions.

Additional studies to be conducted during the remainder of the remedial-design process include:

- Expanding the mineralogical, acid-base and other geochemical evaluations of the tailings to the ores and the mine plan;
- Geochemical evaluation of water-treatment sludges and their stability in the tailing environment;
- Developing a computational model for the pipeline system that will incorporate kinetically controlled geochemical reactions.

BACKGROUND

Kennecott Utah Copper Corporation (KUCC) will undertake a program to manage water quality in portions of the Southwestern Jordan Valley, Utah, that have been contaminated by mining activities associated with the South Facilities of the Bingham Canyon mining complex. The conceptual remedy includes geologic, hydrologic, geochemical, and engineering activities associated with three "functional units":

- Groundwater containment and extraction system;
- Water treatment and hydraulic delivery system for treated water and concentrate;
- Treatment system for acid-plume and Zone A water-treatment concentrate and meteoric-leach water in KUCC tailings circuit.

While the mine is operating, concentrates from the water-treatment system and meteoric leach water will report via the Copperton tailings line as part of the tailings stream to the North Tailings Impoundment. An innovative aspect of the proposed remedial action is the use of the Copperton tailings circuit to neutralize acidity and remove metals and metalloids from the water-treatment and meteoric leach solutions.

Basis for Tailing-Line Treatment

The use of available alkalinity in the tailing slurry for treatment is based on an experimental program developed, executed, and documented by Shepherd Miller Inc. (SMI, 1997). The SMI study, using ambient leach water and a one-time tailing-slurry sample (60 gallons; 227 liters), assumed that (a) the maximum flow of acidic water requiring treatment would be 250 gpm and (b) that the tailing solids (assumed to have a Net Neutralizing Potential of +30 $tCaCO_3/kton$)[3] and tailing slurry (assumed by SMI to be 30% solids by weight)[4] from the test sample were representative of all tailing that would flow through the Copperton line in the future in volumetric flow rate, mineralogy and chemistry. On this basis, the experimental work showed that the tailing slurry would neutralize the acidity (raising the pH of the net effluent to pH > 7), attenuate dissolved metals and metalloids by precipitation (e.g., Al and Fe) and/or adsorption on metal hydroxide phases (e.g., As, Cu, Zn), and attenuate the concentration of sulfate, predominantly through precipitation of gypsum ($CaSO_4 \cdot 2H_2O$). For their experimental conditions, SMI (1997) showed adequate control of the chemical system for all combinations in which the volumetric ratio of tailing slurry to acidic inflows was 40:1 or greater. Under ordinary operational conditions, the total flow of tailing slurry in the Copperton line is > 40,000 gpm, or a ratio of > 160 (slurry) : 1 (acidic inflow at 250 gpm).

---

[3] The NNP value of +30 $tCaCO_3/kt$ was based on another SMI (1997) report, addressing the acid-base balance of samples from the South Impoundment. Based on our reading of the experimental report, the ABA characteristics of the tailing solids used in the experiment were not determined directly.

[4] Current tailing slurry has approximately 45% to 55% solids by weight. Assuming that the particle density of the tailing solids is 2.65 g/cm^3, a 30 wt% tailing would be about 12% solids by volume, whereas a 50 wt% slurry would be approximately 19% by volume.

Changed Conditions

Since SMI completed their evaluation, KUCC has continued to develop its operational conditions and its remedial plans. There are three significant changes to the nature of the system from conditions that were assumed by SMI:

- Beginning in October 2000, KUCC stopped leaching waste rock to recover copper. Therefore, high-acidity, high-TDS water that used to be in continuing circulation within the waste-rock system has, since October 2000, started to drain down and report to the Eastside Collection System (ECS). From the ECS, flows are routed through the Precipitation Plant to recover copper, then through the Wastewater Disposal Pump Station (WDPS) to either the Zone 1 Reservoir (for temporary storage) or directly to the Copperton tailing line at Drop Box NP-5. On 30 August 2001, approximately 1,200 gpm of ECS water plus another 100 gpm of leach water from the Zone 1 Reservoir reported to the tailing line. Long-term flows of meteoric water to the ECS water are expected to be 800 gpm to 1,000 gpm, and it is expected that the chemistry of these flows will remain near that observed today for some substantial time into the future.
- The design basis for pumping acid-plume water was increased from 250 gpm to 2500 gpm in order to meet remedial goals for controlling the plume and cleaning up the aquifer. (The full-scale remedial system would increase flow rates in an orderly progression, rather than jump immediately to the full flow rate of 2500 gpm.)
- Beginning in 2001, KUCC initiated a major, long-term re-orientation of the mining sequence with the large-scale mining from the R6 Cut. The R6 Cut is located on the north and northeast walls of the Bingham Pit, an area that has not been mined for many years. In contrast to the relatively limestone-rich rock mined for the last two decades from the south and southwest walls, rock in the R6 Cut has a low proportion of carbonate and a high proportion of quartzite. The result is ore (and therefore tailing) that has a significantly lower neutralization potential than the long-term average that SMI had considered characteristic for the purposes of their testing and evaluation. A suite of 75 samples collected in August 2001 from Zone 4 of the South Impoundment (plus two additional samples from the north embankment of the North Impoundment) had Net Neutralization Potential (NNP) values ranging from -44 $tCaCO_3/kt$ to +42 $tCaCO_3/kt$, with an arithmetic average NNP of -5 $tCaCO_3/Kt$ [median = -3 $tCaCO_3/kt$][5]. Of the nine, monthly grab samples of tailing collected in 2001 at Copperton before WDPS water was added to the flow system, seven had NNP values $\leq$ 0 $tCaCO_3/kt$, and the 01 September 2001 sample had a NNP value of -42 $tCaCO_3/kt$ (R. Borden, KUCC, personal communication, 05-Oct-01). Mr. Borden's time series data for the Copperton tailing also show a very clear downward trend since mid-1997 (Figure 1).

[5] The samples are not spatially random samples across whole surface area of Zone 4, and the empirical distribution is skewed, probably by a relative over-sampling of the acidified area in Zone 4A. Therefore, the arithmetic-average value should not be taken as a robust estimate of the mean NNP for all of Zone 4. However, only two of the total of 77 samples have NNP values > 15 t CaCO3/kt, and only one has a value greater than 30 t $CaCO_3/kt$, the value of neutralization potential of tailing that was assumed by SMI (1997) to be characteristic. The probability that the true average NNP of current tailing is 30 t $CaCO_3/kt$ or greater, given the available data, is judged to be very low.

Figure 1

Net Neutralization Potential (NNP) of Tailing (tonCaCO3/kton) [Data from R. Borden, KUCC, 05-Oct-01]

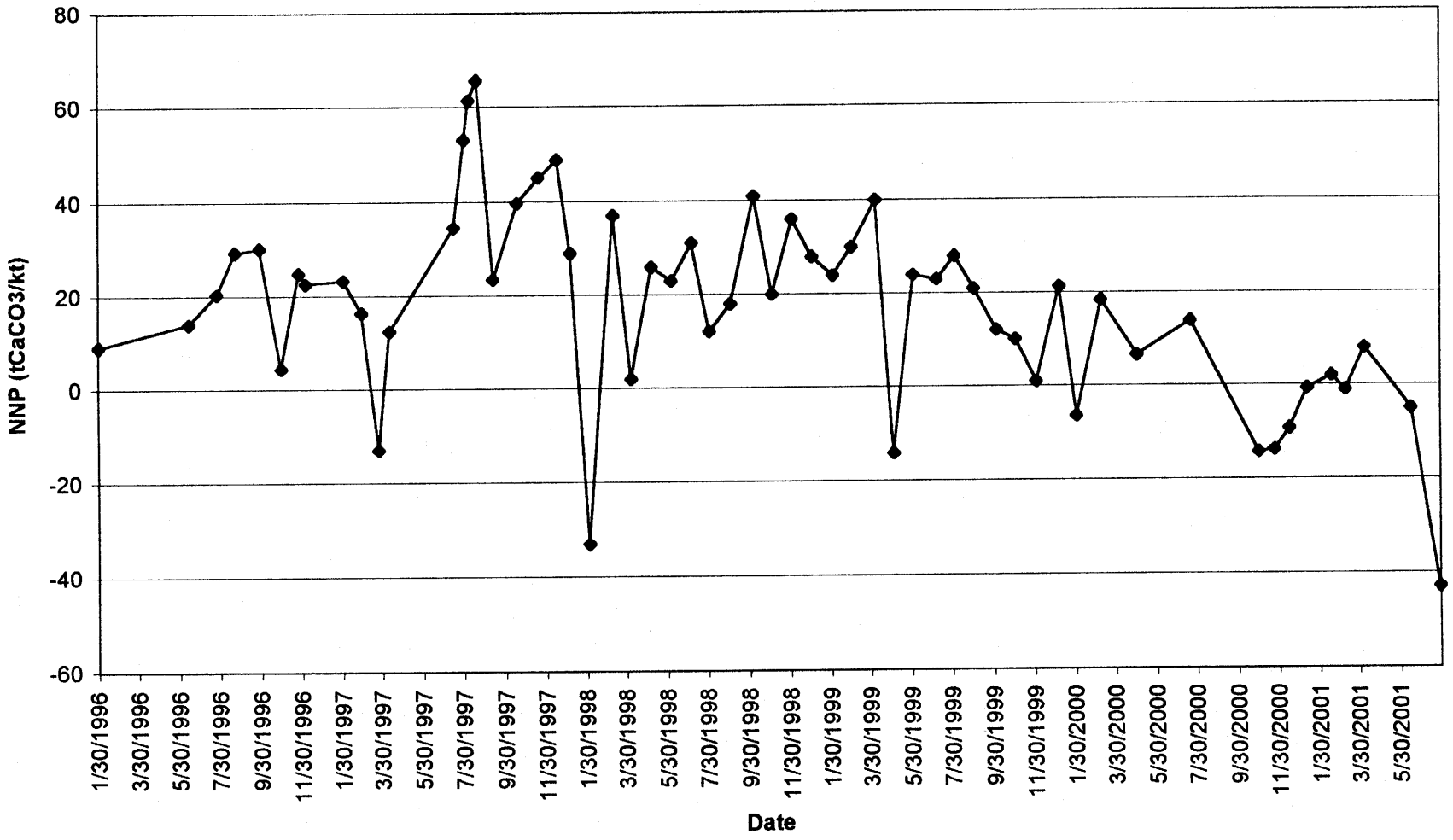

Addition of the previously unanticipated ECS flows and increased pumping of acid-plume water to meet remedial goals produces an anticipated total flow of acidic water of approximately 3500 gpm during the remedial action. For a nominal flow of 40,000 gpm of tailing slurry, the new design-basis, acidic flow would yield a ratio of approximately 11 (slurry) : 1 (acid water), compared to the ratio of 160:1 assumed by SMI. At the same time, the much lower neutralization potential of the tailing solids means that the current tailing has less capacity (per unit mass or volume) to (a) neutralize acidity and attenuate sulfate and metals, or (b) stabilize the pH of the tailing environment in the long run. At this time (late September 2001), the net neutralization potential of the tailing is ≤ 0 even without addition of any acidic waters.

The Problem

To maintain appropriate pH conditions for both processing and discharge of tailing under current conditions (with NF concentrate of approximately 340 gpm reporting to the tailing line), KUCC finds it necessary to either (a) add greater than expected masses of lime (CaO) to the system, or (b) limit the flow of acid-plume water that reports to the tailing line, or both. As part of the Final Remedial Design (currently scheduled for December 2002), KUCC needs a detailed plan for neutralization of acidity and attenuation of metals from the acid-plume waters withdrawn at approximately 2500 gpm plus another 800 to 1000 gpm of acidic flows from the waste-rock drainage systems.

Part of the lime addition is needed in the Copperton Mill to condition ore for flotation because of the lower-than-normal carbonate content of the current ores; current (late September, 2001) lime addition is > 2 lb/ton, versus a long-term rate of 0.7 lb/ton when higher-carbonate ore was produced. Down-stream of the concentrator, the available neutralization potential of the quartzite-rich tailing solids is not sufficient to buffer the net effluent-pH to values greater than 6.8, the empirical target used to ensure that dissolved metals concentrations will meet discharge criteria. Either acid-plume flow must be limited or additional lime must be added to the tailing line in order to control the pH conditions sufficiently to ensure that UPDES discharge limits will be met. Furthermore, high acidity of the ECS and acid-plume waters is depleting the residual tailing solids of their long-term neutralization potential. Finally, because of the very high sulfate concentrations of the acidic waters, the addition of CaO to the system causes large-scale precipitation of gypsum, some of which reports as pipeline scale that interferes with the operation of the tailing line.

Given the expected five-fold increase in acid-plume flow with full-scale implementation of the remedial program, the demand for CaO is expected to increase to approximately 200 tons per day to meet the acid-plume demand alone. If the neutralization potential of the tailing solids remains low, additional lime also will be needed to neutralize ECS flows. The RD/RA project team estimates the total CaO demand for both the acid plume and the ECS flows (assuming no neutralization by tailings) to be approximately 325 tpd. The KUCC team anticipates that at these liming rates, scaling of the upper 1 to 2 miles (2 to 3 km) of the Copperton tailing line would be a serious and ongoing problem that could compromise performance of either (a) the Copperton production or (b) CERCLA-committed remedial programs, or both. Finally, the long-term geochemical stability of the tailing after closure

depends on maintaining an adequate reservoir of available neutralization potential in the tailing mass, including the embankments.

In addition to these general issues, it is important to understand how the currently operated system affects the neutralization and scaling behaviors. Introducing the NF concentrate creates two problems for the tailing line, one of which is greater than would be the effect of introducing acid-plume water directly. Firstly, the acidity of the low-pH water must be neutralized. Because of the currently low neutralization potential of the tailing solids, the neutralization must be done using an alkaline amendment, such as CaO. The total neutralization demand (i.e., CaO usage) over time is the same whether one introduces 525 gpm of acid-plume water or 340 gpm of NF concentrate, because the required neutralization demand depends on the total acidic capacity (flow times acidity), which is the same in either case. However, the potential for (and, in part, the nature of) gypsum precipitation depends not on the total mass of sulfate that moves through the system, but on the concentration of SO_4^{2-} (and Ca^{2+}) in the system at any given moment:

[1] $Ca^{2+}_{(aq)} + SO_4^{2-}_{(aq)} \Leftrightarrow CaSO_{4\,(s)}$ [predominantly as gypsum, $CaSO_4 \bullet 2H_2O$]

The pipeline scale forms when gypsum precipitates from solution, and increases in SO_4^{2-} and Ca^{2+} will increase the degree of supersaturation of the solutions in gypsum. The NF concentrate has a higher concentration of SO_4^{2-} (by a factor of approximately 1.5) than does the acid-plume water, and the use of CaO to neutralize the acidity supplies a large flux of Ca^{2+}. Because the acidity of the NF concentrate also increases by a factor of 1.5, the neutralization of that acidity increases the instantaneous Ca^{2+} concentration over that of the acid-plume water also. Taken together, the increased SO_4^{2-} and Ca^{2+} of the NF concentrate increases the potential for gypsum precipitation in the upper end of the pipeline, as would be expected from applying Le Chatelier's principle to Equation [1]. In addition, experience with the gypsum scale in the Copperton tailing line indicates that, at the high supersaturation of the solutions when treated with CaO, the gypsum that precipitates is very hard, increasing the difficulty in de-scaling the pipeline.

Purpose And Objectives

The purpose of this memorandum is to evaluate the tailing-line treatment system in light of recent geochemical data for the process circuit from the Copperton Concentrator to the North Impoundment.

Specific objectives of the memorandum include:

- Present recent geochemical data for the Copperton tailing line;
- Evaluate those data through mass-balance modeling;
- Discuss the implications of the current geochemical evaluations for the Remedial Design.

Terms of Reference

This memorandum is based on:

- Data collected from 25 May – 26 September 2001 at a series of sampling locations on the Copperton tailing circuit;
- Acid-base accounting data for tailing samples from Zone 4 of the South Impoundment. The samples were collected in late August 2001 and analyzed at Kennecott Environmental Laboratory in August and September, 2001.
- Spreadsheet-based mass-balance calculations;
- Limited geochemical calculations using computerized numerical models;
- Site observations by KUCC and contractor personnel;
- Discussion on 25-26 September between the KUCC team and Drs. David Blowes, John Jambor and Ulrich Mayer;
- Experience with acid-rock drainage in other mining environments.

It is anticipated that this memorandum and its analysis will be revised and updated as additional data collection occurs and as KUCC refines the Remedial Design.

ISSUES

1. To what extent are water-treatment concentrates a source of (a) acidity that needs neutralization and (b) scaling in the tailing-line treatment system?
2. To what extent are ECS/Reservoir flows a source of (a) acidity that needs neutralization and (b) scaling in the tailing-line treatment system?
3. What are the effect and effectiveness of adding alkalinity in the tailing line?
4. What alternative approaches to controlling water quality in the tailing line and disposal system are available, and what would be the benefits and costs of each?

CONCEPTUAL MODEL OF THE PROCESS CIRCUIT

Flow System – Process Circuit

Figure 2 is a schematic diagram of the process circuit, showing the locations of sampling points used in the current evaluations. Estimates of flow rates (in terms of gallons of water per minute) for the portion of the system under study also are shown on the figure, based on information provided by KUCC engineering. Total hydraulic transit time in the pipeline from NP-5 to the discharge points in the tailing impoundment is approximately 2 hours.

The geochemical evaluations in the tailing line need to be based on flows of water, not tailing slurry. The standard estimate of 40,000 – 60,000 gpm of tailing flow through the line

(e.g., past the North Splitter Box) is based on total flow of tailing slurry, including solids. Input flows[6] of water include:

1. input flow from Copperton Reservoir of 40,000 gpm water, and a return flow from the thickeners of 13,500 gpm (net flow of **26,500 gpm**);
2. input flow of from the 31.5" mine-water line of **700 gpm**;
3. input flow from WDPSD of **3,370 gpm** from WDPS (on 30-Aug-01).

The total inflow of approximately 30,000 gpm as water is consistent with total slurry flows of 40,000 gpm given solids that are ca. 15% - 20% of the total slurry volume (40 wt% - 50 wt%; see Footnote 4). This water flow is also consistent with a total inflow to the Copperton reservoir of approximately 30,000 gpm from the Magna Reservoir and the 24" line from the mine (see Figure 2).

Figures 3 to 6 show measured values of pH, SO_4, Ca and Al (chosen to represent the behavior of pH-sensitive metals in solution) from stations BCP2739 (inflow to the concentrator) to Stations TLP1487 (West Cyclone Underflow) and TLP1488 (West Cyclone Overflow). The values shown on these figures are for sampling conducted on 30 August 2001, almost three months after initiation of the acid-well test and during a period in which the only lime being added to the system was for conditioning of the flotation system in the Concentrator. Time-series data shows that the values for 30 August are consistent with the range of values seen over the previous 30 - 60 days of the acid-well test.

Mass Balance and Mineral Saturation-State – Process Circuit

The flow values are used with dissolved concentrations to evaluate mass balance in the system. Differences between assumed conservative mass-balance and observed conditions can be used, together with computerized solubility calculations, to identify the nature and locus within the pipeline of reactions such as neutralization and precipitation that can lead to formation of pipeline scale. For the purpose of this analysis, mass balance from the Copperton Reservoir through the concentrator to the tailing impoundment is considered in terms of SO_4 for flow and solution chemistry on 30 August 2001 (Table 1; Fig 4).

---

[6] Flow estimates in this memorandum are based on KUCC information for the system as of late September, 2001 and correspond to the chemical data collected for the circuit. On or about 02 October, the Copperton Concentrator modified its flow system to increase the slurry density leaving the thickeners (i.e., to decrease the water content of the underflow and increase the volume of overflow that is recycled to the concentrator). In order to ensure proper slurry densities at the cyclones, the operation now recycles water from the Magna Reservoir back to an input point immediately below the North Splitter Box. The KUCC remedial team's sampling program will now be adjusted to reflect the new configuration, and future updates of this memorandum will reflect the new flow configuration. The changes in system configuration are expected to change the details of the chemistry along the flow path, but are not expected to change the qualitative nature of the system, nor the conclusions of this analysis.

Figure 2
PROCESS-WATER SCHEMATIC (Jun - Sep, 2001)

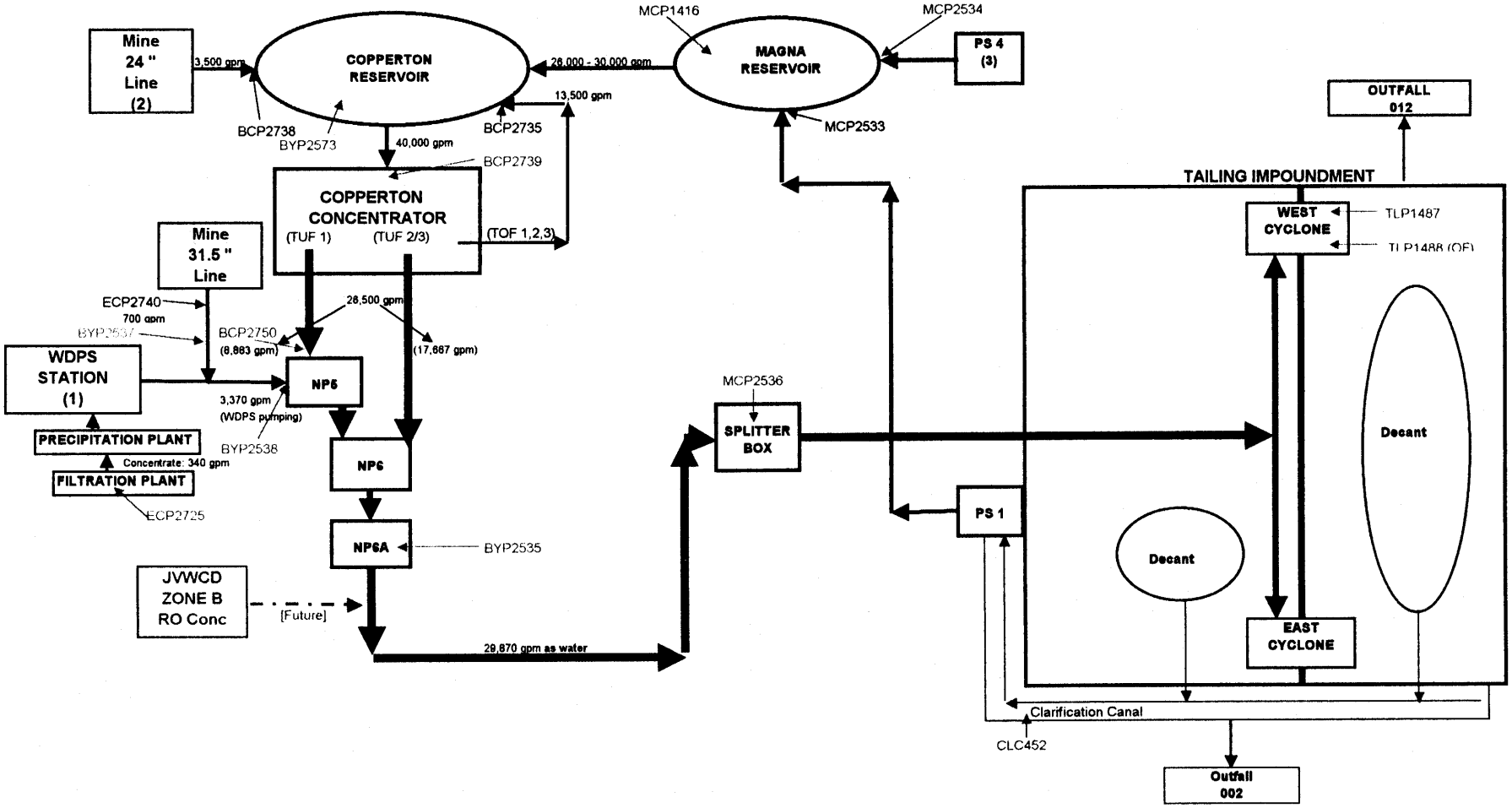

(1) South Stormwater; Meteoric Leach Water; NF Conc; Booster Pump Station Flow; Zone A RO Con.; NF-RO Conc
(2) Pit; Bingham Tunnel; Dry Fork; Barneys; Clean-Water Well; LTG1147
(3) Smelter Return

Figure 3
pH (s.u.) - 8/30/01

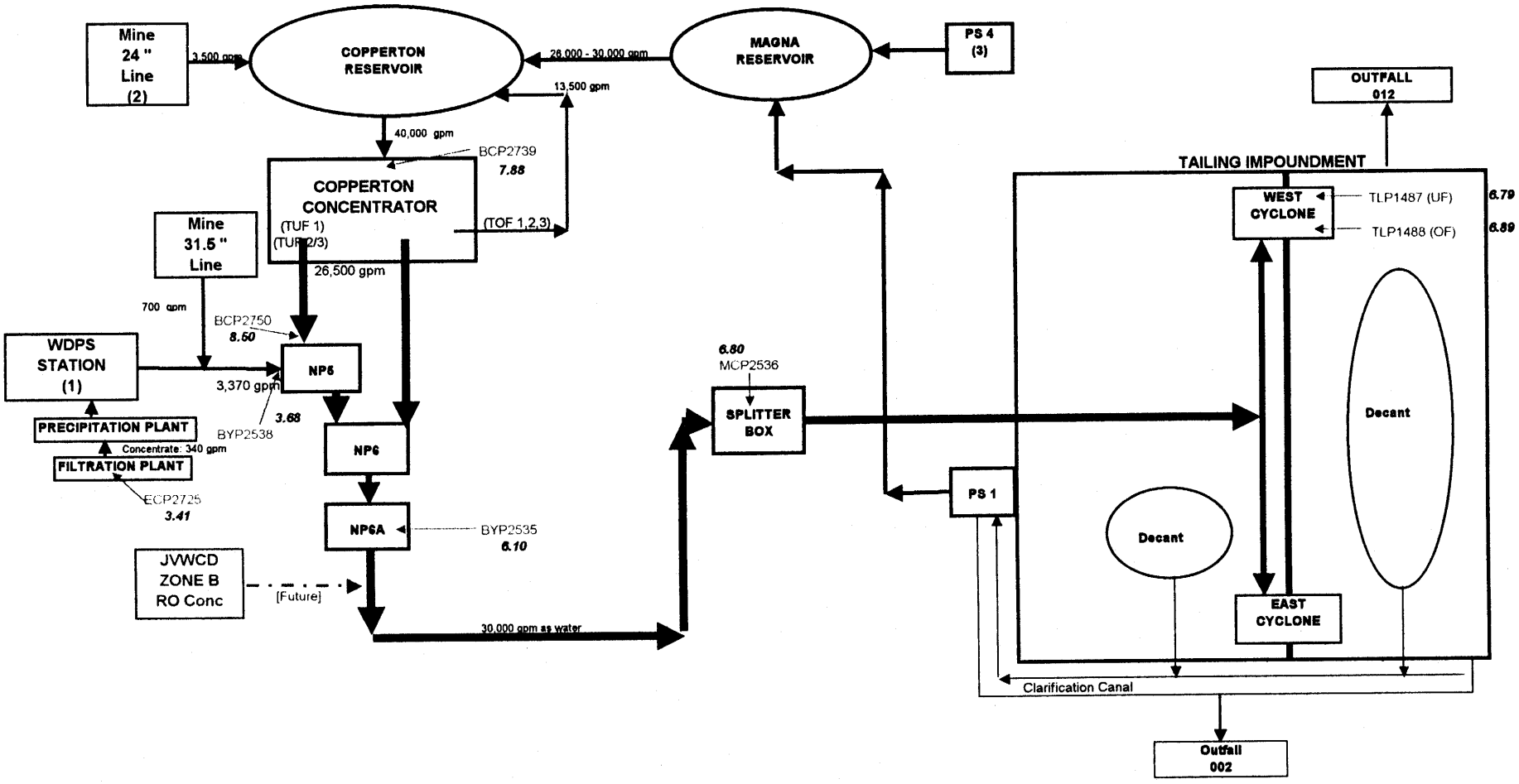

(1) South Stormwater; Meteoric Leach Water; NF Conc; Booster Pump Station Flow; Zone A RO Con.; NF-RO Conc
(2) Pit; Bingham Tunnel; Dry Fork; Barneys; Clean-Water Well; LTG1147
(3) Smelter Return

Figure 4
SO4 (mg/L) - 8/30/01

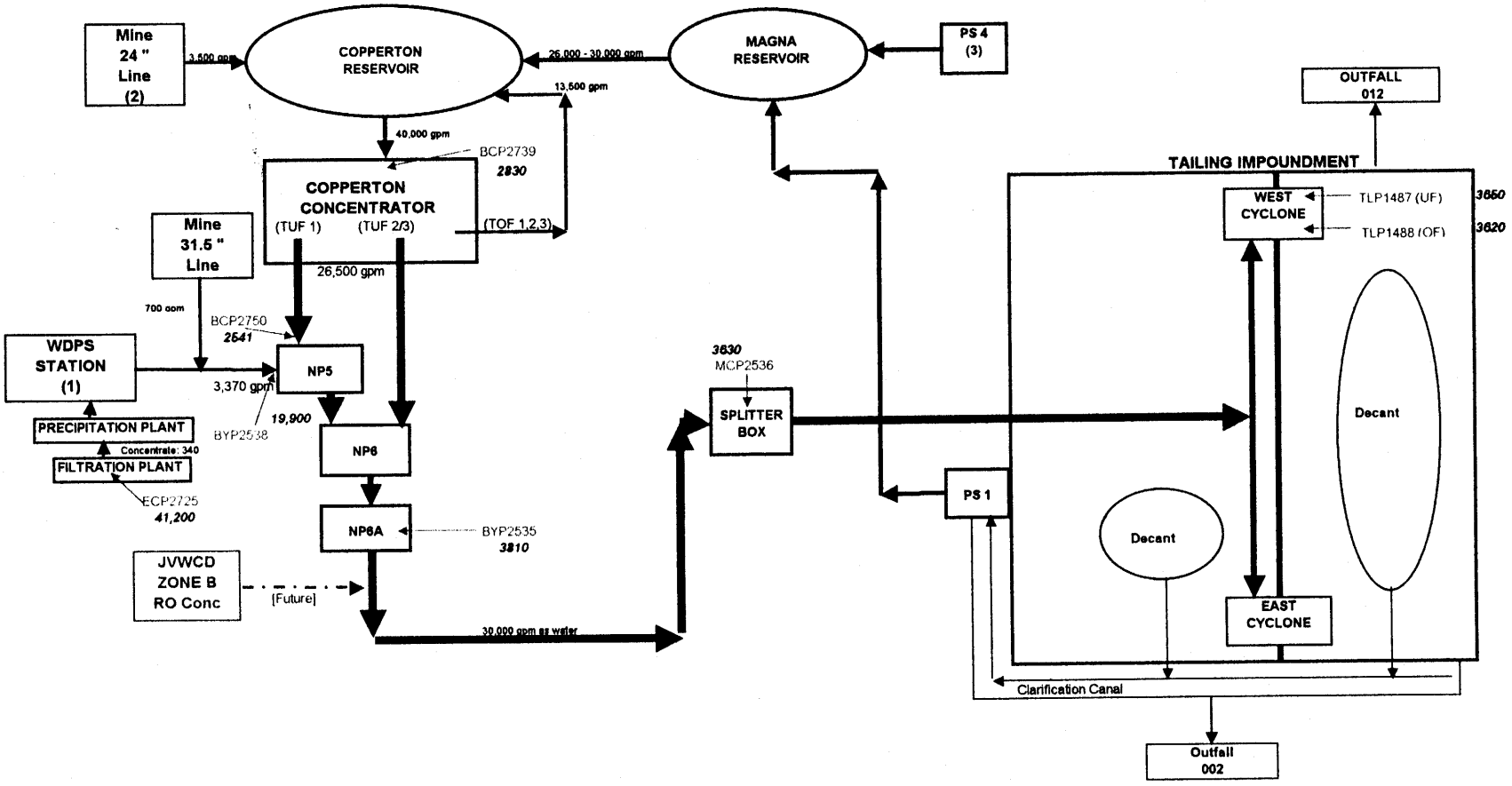

(1) South Stormwater; Meteoric Leach Water; NF Conc; Booster Pump Station Flow; Zone A RO Con.; NF-RO Conc
(2) Pit; Bingham Tunnel; Dry Fork; Barneys; Clean-Water Well; LTG1147
(3) Smelter Return

Figure 5
Ca (mg/L) - 8/30/01

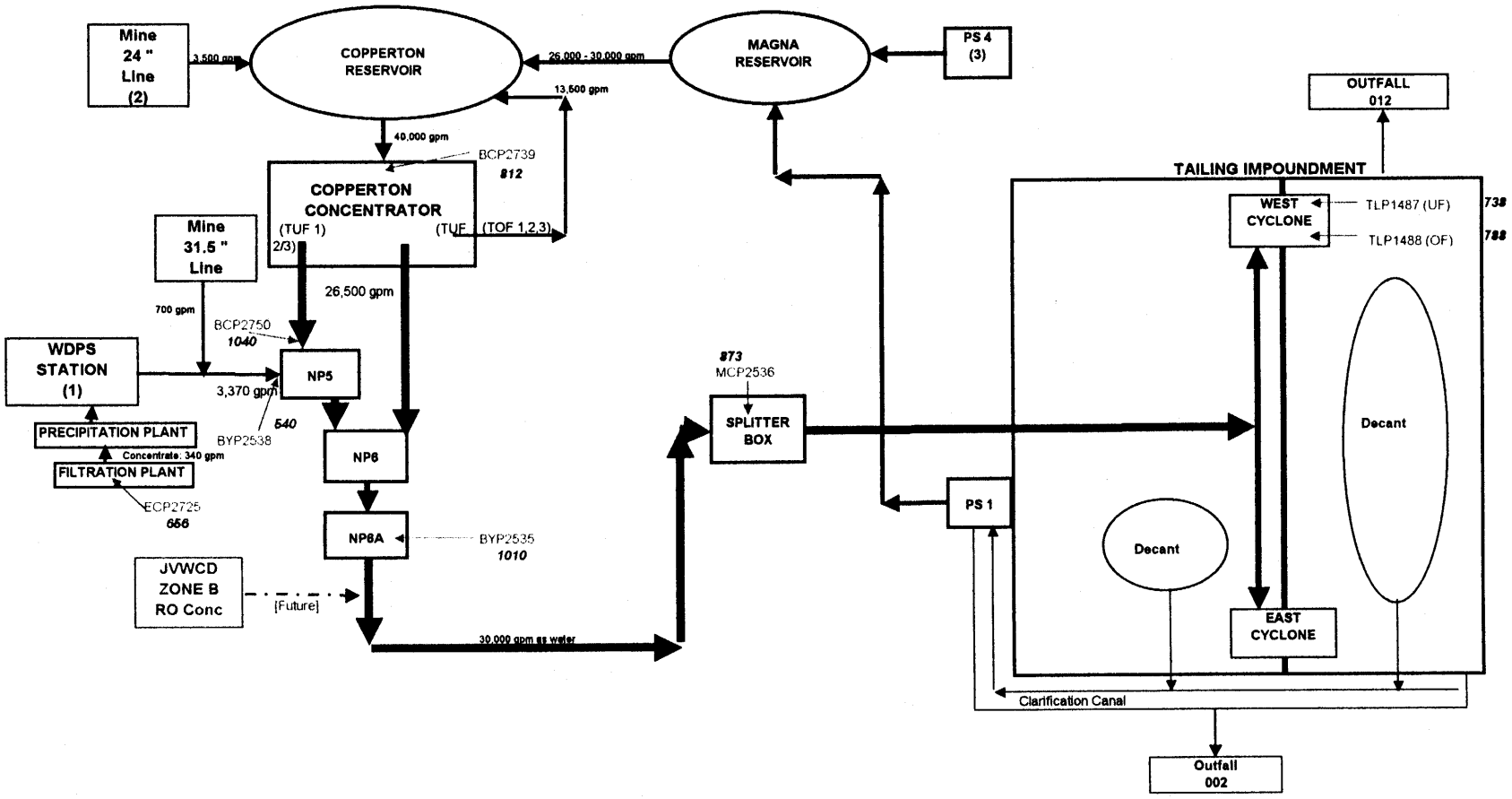

(1) South Stormwater; Meteoric Leach Water; NF Conc; Booster Pump Station Flow; Zone A RO Con.; NF-RO Conc
(2) Pit; Bingham Tunnel; Dry Fork; Barneys; Clean-Water Well; LTG1147
(3) Smelter Return

Figure 6
Al (mg/L) - 8/06/01

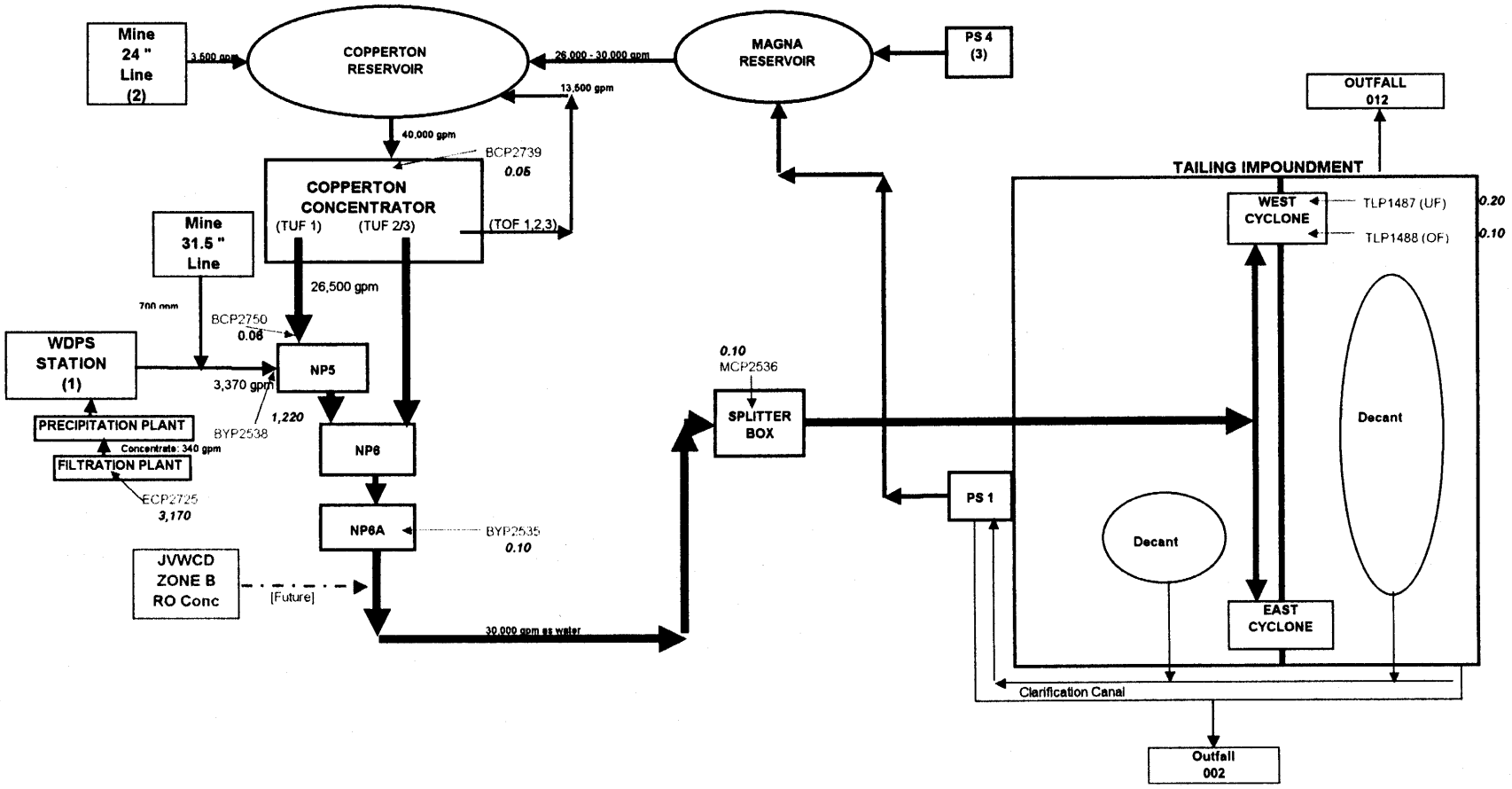

(1) South Stormwater; Meteoric Leach Water; NF Conc; Booster Pump Station Flow; Zone A RO Con.; NF-RO Conc
(2) Pit; Bingham Tunnel; Dry Fork; Barneys; Clean-Water Well; LTG1147
(3) Smelter Return

Table 1 Flow and Measured Sulfate Concentrations, Copperton Reservoir to Cyclones (30 August 2001)

Station	Flow (gpm)	Sulfate (mg/L)
Copperton Reservoir	40,000	2,830
Thickener Overflow (Return)	-13,500	2,540
NP-5 (Tailing Underflow 1)	[8,833] (1)	2,540
WDPS (2) plus 31.5" Line from Mine	3,370	19,900
NP-6A (3)	29,870	3810
North Splitter Box	29,870	3,630
West Cyclone (4)	29,870	3,635
Total To Tailing Impoundment	29,870	4,636 (calc) 3,635 (meas)

(1) Total net flow to the tailing line is **26,500 gpm**; assume that water content from each of the three thickeners is 1/3 of total flow.
(2) WDPS: Wastewater Disposal Pump Station
(3) Flow from thickeners 2 and 3 report to the tailing line at NP-6, about 50m above NP-6A. Therefore, the total net flow (26,500 gpm from the concentrator, plus flows from WDPS and the 31.5" line from the mine) report by sampling station NP-6A.
(4) Total water flow through West Cyclone; Sulfate is average of the measured values for overflow (3,620 mg/L) and underflow (3,650 mg/L). The two measured values are considered to be indiscernible given the precision of sulfate analyses in the range of these values.

The apparent removal of SO_4 from the flow system is greater than can be accounted for in terms of uncertainty in the analytical values. This implies that SO_4 is removed in the system due to some geochemical reaction.

Studies to date by KUCC have identified gypsum as the predominant (60% to > 80%) mineral in the pipeline scale. Given the high concentrations of SO_4 and Ca in the circuit (Figures 3 and 4), computerized speciation calculations for the range of water chemistry show that gypsum precipitation is expected. During the neutralization of the highly acidic input waters from the ECS and NF treatment concentrates (see pH data, Figure 3), essentially all of the Al also is expected to precipitate, and this is, in fact seen in the Al data (Figure 6). Other dissolved constituents (e.g., Fe, SiO_2) also would precipitate during neutralization or (e.g., Cu, Zn) be removed from solution by sorption with metals hydroxides that are stable in near-neutral solutions. In addition to the chemical precipitates, the scale traps some of the tailing solids, increasing the total mass of the scale.

Mass Balance – Wastewater Disposal Pump Station (WDPS)

As shown in Table 1, flows from the wastewater disposal pump station (WDPS) have very high concentrations of dissolved sulfate. The acidic flows, from both the collection systems and from the treatment of acid-plume waters, report to the tailing line via the wastewater disposal pump station (WDPS). Therefore, to understand the relative contributions to the tailing-line system of the ECS and the acid-plume waters, one must also examine the flow and chemistry of solutions that report to WDPS. For the purpose of this analysis (and to be

consistent with Table 1 above), the mass balance of WDPS also is considered in terms of SO_4 for flow and solution chemistry on 30 August 2001 (Table 2):

Table 2 Flow and Sulfate Concentrations, Wastewater Disposal Pump Station (30 August 2001) and 31.5" Mine-Water Line

Source	Flow (gpm)	Sulfate (1) (mg/L)
Eastside Collection System	1200	34,750
Dry Fork	400	5,865
Nanofiltration Concentrate	340	41,200
Westside Collection	150	24,800
Bingham Creek Cutoff	350	4,910
Zone 1 Reservoir	100	36,448
Utah Metals Overflow	100	280
Old Bingham Tunnel	20	4,050
5490	10	4,050
31.5-inch Mine-Water Line	700	1,500
Total Flow to Tailing Line	***3,370***	***19,900 (calc)*** ***19,900 (meas)***

(1) SO_4 estimated from measured values of TDS, using measured values from earlier data sets. The SO_4/TDS ratio in these data sets ranges from ca. 0.7 to ca. 0.8. ECS and Zone 1 calculated by mass balance.

RESULTS

Mass-balance calculations for the system are documented in Attachment 1, a set of EXCEL spreadsheet calculations that compute mass loading of sulfate (SO_4) in the portion of the process circuit under consideration. For the data on 30 August 2001, key results are:

- Sulfate concentrations (also pH, Ca, Al and all other chemical parameters), show little or no change from the North Splitter Box (MCP2536) to the West Cyclone stations. Sulfate concentration falls slightly between the Copperton Reservoir inflow (2,830 mg/L) and NP5 (2,541 mg/L). Over this interval, the concentration of Ca increases.
- The calculated concentration of SO_4 at MCP2536 (North Splitter Box) based on conservative mass balance would be 4,636mg/L. The observed concentration on 30 August 2001 was 3,630 mg/L.
- WDPS flow represents 48% of the SO_4 introduced to the process circuit. Despite its relatively low SO_4 concentration (2,830 mg/L), inflow from the Copperton reservoir represents 52% of the total SO_4 in the circuit, because of its predominant volumetric contribution (88% of total flow).
- NF water-treatment concentrates at a flow of ca.340 gpm account for only 10% of the total SO_4 introduced to the process system.
- The ECS flows represent 66% of the SO_4 reporting to WDPS and 32% of the total SO_4 introduced to the system. There also is a small (150 gpm) flow to the WDPS of

mineralized waters from the west side of the South Facilities; these are referred to here as the "Westside Collection" flows. Accounting also for the sulfate load associated with the Westside collection, total waste-rock draindown represents 71% of the total sulfate loading to WDPS.

- If the ECS and Westside flows were not delivered to the Copperton Tailing Line, the expected concentration of SO_4 in the tailing line due to 500 gpm of acid-plume water would be approximately 3,200 mg/L, whereas at a flow rate of 2500 gpm plus 900 gpm[7] of combined waste-rock flows, the expected SO4 concentration would be 4,600 mg/L.

DISCUSSION

Data Trends

1. The observed value of 3,630 mg/L at the North Splitter Box is 22% lower than the 4,636 mg/L value that would be expected if all the additional sulfate introduced to the tailing line through the WDPS were still present in solution. The decrease in observed compared to calculated SO_4 concentration along the flow path to the North Splitter Box is associated with precipitation of sulfate-bearing minerals. These phases are expected to include both gypsum ($CaSO_4 \cdot 2H_2O$) (and other forms of calcium sulfate that have been identified by KUCC investigations) and aluminum and possibly iron hydroxysulfates such as basaluminite [$Al_4(SO_4)(OH)_{10} \cdot 5\ H_2O$] and jarosite [$KFe_3(SO_4)_2(OH)_6$]. Over the observed pH range of the tailing line system, it is likely that Al and Fe also precipitate as the hydroxides [$Al(OH)_3$; $Fe(OH)_3$].

Contributions of Acid-Plume and ECS Waters

2. As currently configured, the dominant source of SO_4 (and acidity) to the tailing pipeline is flow from the Eastside Collection System.
3. At this time, the acid-plume water at a flow of 500 – 550 gpm (approximately 340 gpm as nanofiltration concentrate) constitutes only about 10% of the total SO_4 that reports to the tailing pipeline. As discussed above, the CaO needed to treat the full flow of acid-plume water is the same as that needed to treat the lower NF flow at a proportionally higher acidity.
4. If the acid-plume water were the only high-sulfate source reporting to the tailing line, the expected concentration of SO_4 in the pipeline system would be less than 3,200 mg/L.

Effect and Effectiveness of Lime Addition to Tailing Pipeline

5. The principal effects of adding lime (CaO) to the tailing line below the Copperton Concentrator are (a) to raise the pH of the net effluent and (b) to precipitate gypsum

[7] KUCC estimates that long-term flows from the ECS will decline to about 800 gpm. For this memo we further estimate that the Westside flows would decline from 150 gpm to 100 gpm. Thus the total, long-term flow is estimated at 900 gpm, compared to the current flow rates of 1200 gpm plus 150 gpm, or 1350 gpm.

(as the Ca^{2+} released from the lime reacts with the dissolved SO_4^{2-} of the flows in the slurry mixture).

6. The performance of the pipeline system over the last year shows that, by properly monitoring the system and either adding lime or limiting the flow of WDPS waters when pH begins to fall, KUCC can control the net pH of the system to pH $\geq$ 6.8, needed to control metals concentrations in the decant pools for discharge. In the future, as the pumping of acid-plume water increases in periodic increments to the design-basis 2500 gpm from the current 500 – 550 gpm, limiting acid-plume water flows will not be practicable due to limitation of storage capacity. Furthermore, as the combined acidic flows (i.e., ECS, Zone 1 and acid-plume) increase, the lime addition needed to control pH will cause excess gypsum precipitation, much of which forms a scale on the pipe itself.
7. Numerous evaluations by KUCC and others have shown that at concentrations below approximately 3,500 mg/L, pipeline scaling would be minor, and perhaps negligible, because at that concentration the thermodynamic activity of SO_4^{2-} in the complex matrix of the slurry liquid is at or below the activity necessary to precipitate gypsum given the Ca^{2+} in solution. Also, because acidity is nearly proportional to sulfate concentration in the acid-plume and leach waters, reducing loading of sulfate also would imply lower loadings of total acidity. Lower acidity loads would require proportionally lower rates of lime addition to the tailing line to maintain near-neutral pH and control metals for discharge.

Alternative Approaches

Prior to full-scale remedial action, it will be necessary for KUCC to address the current issues associated with using the tailing line for both treatment and disposal of sludges. The currently proposed approach to managing acidity in the tailing line is to (a) add CaO as necessary to control pH and then (b) clean scale from the upper pipeline as necessary in order to manage total tailing flow through the pipeline. KUC Engineering Services has modified the pipeline diameter and also has developed the de-scaling technique needed to maintain the system.

8. Several alternatives (some of which could be used in combination) to the currently proposed system could be considered by KUCC:

    - ***Send acid-plume water directly to the Copperton tailing line without nanofiltration (NF) treatment. [Lime treatment still would be required.]***

      Advantages:

        - Eliminating NF treatment decreases the supersaturation of solutions with respect to gypsum by limiting the concentration of both Ca^{2+} and SO_4^{2-}. This mitigates the potential for gypsum scale to form in the pipeline.
        - Eliminating NF treatment decreases unit treatment costs for total flow system (by eliminating the process with the highest unit costs).

Disadvantages:

- Eliminating NF treatment requires that additional flows of potable water be developed by KUCC to meet the NRD requirements.
- Eliminating NF treatment requires retrofitting of the current NF facilities to Reverse Osmosis or other treatment streams.
- Eliminating NF treatment incurs additional engineering costs associated with changing the design basis for water treatment.

- ***Neutralize all acidic flows (Eastside and Westside flows, Zone 1 water, and acid-plume flows) with lime (CaO) prior to the tailing-line circuit.***

Advantages:

- Treatment prior to the tailing-line system minimizes pipeline scale, because the reactions would occur in the reactors, not the pipeline.

- Lime treatment is a proven technology for treatment of acidic waters, and KUCC already had planned to move to lime treatment when tailing no longer was available for use in the pipeline reactor.

- The KUCC program already plans to use lime treatment with sludge segregation as part of the long-term (i.e., post-mining) water-treatment system. Therefore, this is not an entirely new element to the water-treatment program, but rather would reflect a change in the timing at which the technology would need to be invoked.

- It is likely that a lime-treatment system could be installed in the area of the current Precipitation Plant. From this location, it would appear practicable to route treated waters and sludges to the tailing line in much the manner that untreated waters now are routed.

- It is expected, based on test work to date and experience with other mine-water treatment systems, that lime-treatment sludges would not be characteristically hazardous. Additional work to confirm this is planned as part of the currently scoped Remedial Design activities.

- During operations, the tailing line still could be used to transport treatment sludges.

Disadvantages:

- Lime treatment produces large volumes of sludge that require disposal. Possible locations for sludge disposal would include the tailing impoundment, one of the KUCC or Barneys Canyon open pits, or new repositories designed for this purpose.

- Geochemical stability in the disposal environment of the Al- and Fe-solids (with their adsorbed trace metals) that are part of the total sludge must be considered.

- Treatment waters after clarification /thickening of sludges probably would still have elevated SO_4 concentrations. The residual SO_4 concentration would depend primarily on the pH to which the lime treatment raises the treatment solution. The pH values needed to produce relatively low SO_4 (i.e., < ca. 3,000 mg/L) may imply lime addition that would be cost-prohibitive, given other, overall treatment options.

- ***Use the tailing line for treatment, but use a non-Ca-based alkaline additive, such as soda ash.***

  Advantages:

  - Soda-ash treatment is a proven technology for treatment of acidic waters.

  - Use of soda ash would minimize pipeline scale due to gypsum precipitation.

  - Sludges would almost surely not be characteristically hazardous, based on industry experience and the fundamental behavior of the excess carbonate alkalinity of the expected sludges.

  - During operations, the tailing line still could be used to treat and transport acidic waters and their sludges.

  Disadvantages:

  - Soda ash is approximately 20% more expensive than lime (Helmar Bayer, HGB/KUCC, personal communication, 19-Oct-01).

  - Net effluents would be higher in TDS and SO_4 than would be waters treated with CaO, because Na forms no low-solubility phases with sulfate. The concentrations of trace metals in the net effluent would depend primarily on the pH to which the system is taken.

  - Possibility of alternative pipeline scale is not known. Sludges would be produced. Geochemical stability in the disposal environment of the Al- and Fe- solids (with their adsorbed trace metals) that are part of the total sludge must be considered.

- ***Neutralize the pipeline flows with lime or soda ash at discharge to the impoundment, not at the upper end of the pipeline system.***

  Advantages:

  - Lime and soda-ash treatment are proven technologies for treatment of acidic waters. Given the long expected residence time in the decant system (ca. 21 days), retention time for neutralization and precipitation should be adequate.
  - Post-pipeline treatment would minimize pipeline scale.
  - Sludges are not expected to be characteristically hazardous.
  - During and even after operations, the tailing line still could be used to transport treatment sludges.
  - Adding alkalinity at the impoundment allows KUCC to protect the final tailing against long-term ARD generation.

  Disadvantages:

  - This approach would produce large volumes of sludge, most of which would be deposited in the footprint of the decant pond. The impacts of this layering on geotechnical stability would require careful evaluation.
  - There may be a tendency for some scale formation to occur along the entire length of the pipeline (due to the reaction between some acidic water introduced from the mine waters and the tailing), rather than to concentrate the scaling in the new, large-diameter pipe at the upper end of the system.
  - There may be regulatory hurdles (i.e., under the ROD) associated with discharging from the tailing pipeline prior to treatment.
  - The current cyclone system is not configured to allow this, and such a system would need detailed engineering evaluation to understand its effectiveness and costs.
  - Geochemical stability in the disposal environment of the Al- and Fe-solids (with their adsorbed trace metals) that are part of the total sludge must be considered.
  - There almost surely would be turbid water in the decant ponds under most, if not all, conditions, due to wind action on the surface and the poor settling characteristics of gypsum or soda-ash sludges. Both the

TSS and the possibility of total-metals concentrations in the turbid waters would need careful consideration.

CONCLUSIONS AND RECOMMENDATIONS

Short-Term Issues:

1. Under current (Fourth Quarter, 2001) conditions, the principal source of acidity and sulfate loading to the Copperton tailing line is the Eastside Collection System (ECS). When the acid-plume flow increases to the design basis of 2500 gpm, the acid-plume flows would become the principal (ca. 2/3) source of acidity and sulfate.

2. If acid-plume water alone (i.e., without nanofiltration concentration) were added to the tailing line at the current rate (ca. 500 gpm), the expected concentration of SO_4 in the line would be less than 3,200 mg/L, and pipeline scale would not be a significant issue. This conclusion is consistent with the work reported by SMI (1997) and reflects the importance to controlling gypsum scale of limiting **concentration** of Ca and SO_4.

Longer-Term Issues:

3. Given (a) the addition of the ECS flows and the planned increase of acid-plume water to a total flow of 2500 gpm and (b) the decreased neutralization potential of the tailing solids, the technical basis for treatment in the pipeline no longer is apt.

4. The consequence of the currently planned flow configurations for full-scale remedial systems and expected tailing characteristics is such that (a) very large amounts of lime (> 300 tpd) would be needed to neutralize the solutions and (b) large amounts of gypsum scale should be expected in the pipeline.

5. In addition to substituting untreated acid-plume water for NF concentrate, at least three alternative approaches could be implemented. All of these have significant costs that are not part of the current design basis. Based on our evaluation to date, lime treatment of the acidic flows prior to routing flows to the Copperton tailing line appears to be the most practicable because it assures pH control, allows use of the pipeline for sludge disposal, and limits the potential for gypsum-scale formation in the pipeline.

ADDITIONAL STUDIES

The matters discussed in this interim memorandum require additional study in order to develop a final remedial design. Ongoing studies to further evaluate these issues include:

- Continuing data collection and geochemical analysis of flows in the process circuit;

- Mineralogical evaluation of tailing, including reaction products through the process circuit and into the tailing impoundment and its embankments;
- Evaluation of acid-base balance of tailing through the circuit from the Copperton Concentrator to the impoundment.
- Water and mass balance modeling of the WDPS and process circuit systems.
- Chemical and engineering studies of lime-treatment systems, including chemical evaluations of the nature of the lime-treatment sludges and the overflow solutions.

Additional studies to be conducted during the remainder of the remedial-design process include:

- Expanding the mineralogical, acid-base and other geochemical evaluations of the tailings to the ores and the mine plan;
- Geochemical evaluation of water-treatment sludges and their stability in the tailing environment;
- Developing a computational model for the pipeline system that will incorporate kinetically controlled geochemical reactions.

ACTION

1. **KUCC:** Consider the analysis and recommendations of this memorandum and provide direction to the KUCC RD/RA Team.

2. **Geochimica:** Continue geochemical studies and prepare updated revisions or additional memoranda on a quarterly basis.

REFERENCES

Shepherd Miller, Inc., 1997. Investigation of the Potential for Treatment of Acidic Ground Water by Mixing in the Copperton Tailings Line, Kennecott Utah Copper Corp., Bingham Canyon, Utah. Contractor report to Kennecott Utah Copper Corp. September 19, 1997.

Shepherd Miller, Inc., and Schafer and Associates, 1995. Acidification Potential of the Kennecott Tailings. Contractor report. May 18, 1995.

NB: SMI (1997) cites another SMI (1997) report that is identified only as "Appendix A Sampling Results, May 1997". This appears to be the basis for the statement that the neutralization potential of the tailing is expected to be 30 t $CaCO_3$/kiloton. The text of SMI (1997) above identifies a $CaCO_3$ content of tailing in the experimental sample of 1.7%, which would be 17 t CaCO3/kt.

Source	Q (gpm)	PropQ	SO4	SO4(wt)	Prop SO4	Leach	NF	ECS+West
ECS	1200	0.356083	33,770	12025	0.604278	65.7%	20.9%	71.3%
Dry Fork	400	0.118694	5,865	696	0.034983			
NF Conc	340	0.10089	41,200	4157	0.208882			
Westside BingCrk	150	0.04451	24,800	1104	0.055471			
Cutoff	350	0.103858	4,910	510	0.025626			
Zone 1	100	0.029674	35,459	1052	0.052874			
Utah Metals Overflow	100	0.029674	280	8	0.000418			
Old Bing Tunnel	20	0.005935	4,050	24	0.001208			
5490	10	0.002967	4,050	12	0.000604			
31.5" Line	700	0.207715	1,500	312	0.015657			
	3370	*1.000*		19900	*1.000*			
				19900	*observed*			

Current Conditions (30-Aug-01)

Point Source	Q	Prop Q	SO4	SO4(wt)	Prop SO4	Prop SO4 (NF / WDPS)	Prop SO4 (NP6A)
BCP2739	40,000		2,830				
Thickener Return Flow	13,500		2,560				
Net, ex Thickeners	26,500	0.887178	2,695	2391	0.515722		
WDPS + 31.5"	3,370	0.112822	19,900	2245	0.484278	20.9%	10.1%
				4636	*1.000*		
	29,870	*1.000*		*3630*	*BYP2535*		
				21.7%	*RPD(obs)*		

Acid Plume (500 - SO4 at 23,500); No ECS, Zone 1, West

Source	Q (gpm)	PropQ	SO4	SO4(wt)	Prop SO4	Leach	Acid Plume
ECS						0.0%	69.1%
Dry Fork	400	0.192308	5,865	1128	0.137886		
Acid Plume	500	0.240385	23,500	5649	0.690608		
Westside BingCrk Cutoff	350	0.168269	4,910	826	0.101005		
Zone 1 Utah Metals Overflow	100	0.048077	280	13	0.001646		
Old Bing Tunnel	20	0.009615	4,050	39	0.004761		
5490	10	0.004808	4,050	19	0.00238		
31.5" Line	700	0.336538	1,500	505	0.061714	1.000	
	2080	1.000		8180	predicted		
				19900	observed	8/30/01	

Acid Plume (2500 - SO4 at 20,000); No ECS, West, Zone 1

Source	Q (gpm)	PropQ	SO4	SO4(wt)	Prop SO4	Leach	Acid Plume
ECS						0.0%	90.5%
Dry Fork	400	0.098039	5,865	575	0.042451		
Acid Plume	2500	0.612745	20,000	12255	0.904748		
Westside BingCrk		0			0		
Cutoff	350	0.085784	4,910	421	0.031096		
Zone 1 Utah Metals		0			0		
Overflow	100	0.02451	280	7	0.000507		
Old Bing Tunnel	20	0.004902	4,050	20	0.001466		
5490	10	0.002451	4,050	10	0.000733		
31.5" Line	700	0.171569	1,500	257	0.019	1.000	
	4080	1.000		13545	predicted		
				19900	observed	8/30/01	

Acid Plume (250 - SO4 at 20,000); long-term flow at ECS, West; no Zone 1

Source	Q (gpm)	PropQ	SO4	SO4(wt)	Prop SO4	Leach	Acid Plume	ECS+West
ECS	800	0.29304	20,000	5861	0.566091	56.6%	17.7%	63.7%
Dry Fork	400	0.14652	5,865	859	0.083003			
Acid Plume	250	0.091575	20,000	1832	0.176903			
Westside BingCrk	100	0.03663	20,000	733	0.070761			
Cutoff Zone 1 Utah Metals	350	0.128205	4,910	629	0.060802			
Overflow Old Bing	100	0.03663	280	10	0.000991			
Tunnel	20	0.007326	4,050	30	0.002866			
5490	10	0.003663	4,050	15	0.001433			
		0			0			
31.5" Line	700	0.25641	1,500	385	0.03715	1.000		
	2730	1.000		10353	predicted			
				19900	observed	8/30/01		

Acid Plume (2500 - SO4 at 20,000); long-term flow at ECS, West; No Zone1

Source	Q (gpm)	PropQ	SO4	SO4(wt)	Prop SO4	Leach	Acid Plume	ECS+West
ECS	800	0.160643	20,000	3213	0.218388	21.8%	68.2%	24.6%
Dry Fork	400	0.080321	5,865	471	0.032021			
Acid Plume	2500	0.502008	20,000	10040	0.682463			
Westside BingCrk	100	0.02008	20,000	402	0.027299			
Cutoff Zone 1 Utah Metals	350	0.070281	4,910	345	0.023456			
Overflow Old Bing	100	0.02008	280	6	0.000382			
Tunnel	20	0.004016	4,050	16	0.001106			
5490	10	0.002008	4,050	8	0.000553			
31.5" Line	700	0.140562	1,500	211	0.014332	1.000		
	4980	1.000		14712	predicted			
				19900	observed	8/30/01		

Acid Plume (500@23500) No ECS,West< Zone1

Point Source	Q	Prop Q	SO4	SO4(wt)	Prop SO4	Prop SO4 (AP / WDPS)	Prop SO4 (AP/NP6A)
BCP2739 Thickener	40,000		2,830				
Return Flow	13,500		2,560				
Net, ex Thickeners	26,500	0.927222	2,695	2499	0.807599		
WDPS + 31.5"	2,080	0.072778	8,180	595	0.192401	69.1%	13.3%
				3094	1.000		
	28,580	1.000		3810	BYP2535	8/30/01	
				-18.8%	RPD(obs)		

Acid Plume (2500 @ 20,000) No ECS, West, Zone 1

Point Source	Q	Prop Q	SO4	SO4(wt)	Prop SO4	Prop SO4 (AP / WDPS)	Prop SO4 (AP/NP6A)
BCP2739 Thickener	40,000		2,830				
Return Flow	13,500		2,560				
Net, ex Thickeners	26,500	0.866579	2,695	2335	0.563758		
WDPS	4,080	0.133421	13,545	1807	0.436242	90.5%	39.5%
				4143	1.000		
	30,580	1.000		3810	BYP2535	8/30/01	
				8.7%	RPD(obs)		

Acid Plume (250 @ 20,000) ECS (800@20k), West (100@20k), No Zone 1

Point Source	Q	Prop Q	SO4	SO4(wt)	Prop SO4	Prop SO4 (AP / WDPS)	Prop SO4 (AP/NP6A)
BCP2739 Thickener	40,000		2,830				
Return Flow	13,500		2,560				
Net, ex Thickeners	26,500	0.906603	2,695	2443	0.716459		
WDPS	2,730	0.093397	10,353	967	0.283541	17.7%	5.0%
				3410	1.000		
	29,230	1.000		3810	BYP2535	8/30/01	
				-10.5%	RPD(obs)		

Acid Plume (2500 @ 20,000) ECS (800@20k), West (100@20k), No Zone 1

Point Source	Q	Prop Q	SO4	SO4(wt)	Prop SO4	Prop SO4 (AP / WDPS)	Prop SO4 (AP/NP6A)
BCP2739	40,000		2,830				
Thickener Return Flow	13,500		2,560				
Net, ex Thickeners	26,500	0.841804	2,695	2269	0.493613		
WDPS	4,980	0.158196	14,712	2327	0.506387	68.2%	34.6%
				4596	1.000		
	31,480	1.000		3810	BYP2535	8/30/01	
				20.6%	RPD(obs)		

APPENDIX B

APPENDIX B

INTERIM EVALUATION OF TAILING-LINE SYSTEM GEOCHEMISTRY

October, 2001

KUCC WATER QUALITY RESULTS
THROUGH 11/7/01
SORTED BY LOCATION

Desc		Date	* pH (Field)	Acidity	Alkalinity	TDS	Aluminum	Calcium	Chloride	Copper	Fluoride	Iron	Magnesium	Manganese	Potassium	SiO2	Sodium	Sulfate	Zinc
		MDL	-0-	10	5	20	0.10	1	5	0.02	0.1	0.3	1	0.01	0.5	2	1	5	0.02
		UNITS	-0-	L as CaCO3	L as CaCO3	mg/L	mg/L	mg/L	mg/L	mg/L	mg/L	mg/L	mg/L	mg/L	mg/L	mg/L	mg/L	mg/L	mg/L
BCP2739			**INFLOW TO COPPERTON CONCENTRATOR**																
BCP2739		5/25/01	7.44		73	6530	0.20	807	1560	0.06	3.6	#VALUE!	332	1.5	121	10	1040	2450	0.2
BCP2739		5/29/01	7.74		111	5660	#VALUE!	540	1460	0.07	3.4	#VALUE!	221	1.2	77.7	13	749	1870	0.6
BCP2739		5/30/01	7.67		124	4810	0.50	613	1220	0.04	1.4	#VALUE!	201	0.76	87.8	16	728	1650	0.5
BCP2739		5/31/01	7.38		91	6270	0.50	845	1640	0.11	3.9	#VALUE!	333	1.17	126	8	1040	2660	0.16
BCP2739		6/1/01	7.53		92	6300	0.70	884	1560	0.10	3.8	#VALUE!	298	0.9	132	10	1040	2550	0.12
BCP2739		6/2/01	7.44		81	6810	0.30	1080	1900	0.24	3.3	#VALUE!	374	0.93	168	13	1580	2470	0.18
BCP2739		6/3/01	7.52		#VALUE!	7340	1.10	991	2130	0.42	3	#VALUE!	294	0.84	165	13	1560	2720	0.13
BCP2739		6/4/01	8.10		90	6690	1.40	977	1800	0.17	3.4	#VALUE!	272	0.96	170	11	1380	2640	0.2
BCP2739		6/5/01	8.36		96	6370	0.80	923	1580	1.96	3.7	0.4	270	0.85	143	9	1120	2480	0.07
BCP2739		6/6/01	8.40		101	6360	#VALUE!	744	1540	2.80	3.7	#VALUE!	281	1.1	123	9	992	2500	0.05
BCP2739		6/7/01	7.83		94	6370	0.20	802	1570	1.60	3.9	#VALUE!	317	1.1	142	9	1080	2830	0.03
BCP2739		6/8/01	8.45		77	6820	2.10	755	1910	0.42	3.4	0.5	308	1.28	133	10	1280	2780	0.11
BCP2739		6/9/01	7.73		88	7150	2.20	848	1950	0.57	3.6	#VALUE!	284	1.71	135	13	1210	2420	0.19
BCP2739		6/10/01	7.42		68	7260	0.30	835	1930	0.19	3.5	#VALUE!	294	1.1	138	11	1080	2540	0.12
BCP2739		6/11/01	7.47		72	6700	0.40	1520	1670	0.21	3.3	#VALUE!	367	1.02	237	11	1060	2300	0.13
BCP2739		6/12/01	7.77		102	6130	0.30	1010	1500	0.13	3.4	#VALUE!	336	1.05	177	13	903	2620	0.13
BCP2739		6/13/01	7.80		83	5700	#VALUE!	817	1370	0.47	3.4	0.6	257	0.89	147	12	928	2540	0.11
BCP2739		6/14/01	6.96		82	6020	#VALUE!	808	1520	0.16	3.7	#VALUE!	263	0.95	141	11	1300	2540	0.2
BCP2739		6/15/01	7.62		69	7300	1.60	628	1890	0.17	3.7	#VALUE!	357	1.5	149	10	979	2560	0.17
BCP2739		6/19/01	7.64		86	6990	0.20	695	1740	0.56		#VALUE!	245	1.1	144		883	2570	0.16
BCP2739		6/21/01	3.89		64	6830	2.20	632	1660	0.81		0.6	312		131		1170	2630	0.16
BCP2739		6/25/01	7.69		79	6410	0.20	818	1620	0.04		#VALUE!	246		118		1030	2560	0.12
BCP2739		6/28/01	7.57		67	6140	0.20	740	1510	0.11		#VALUE!	242		111		949	2300	0.11
BCP2739		7/2/01	7.67		82	7500	0.10	933	2180	0.14		#VALUE!	378		158		1240	2590	0.14
BCP2739		7/5/01	7.46		73	7240	1.10	737	1690	0.10		0.4	263		112		1082	2920	0.19
BCP2739		7/9/01	7.38		88	7590	0.90	802	2240	0.05		#VALUE!	328		137		1250	2570	0.16
BCP2739		7/12/01	7.46		166	7910	#VALUE!	795	2250	#VALUE!		#VALUE!	318		132		1390	2650	0.04
BCP2739		7/16/01	7.48		86	8390	0.20	849	2020	0.04		#VALUE!	361		143		1450	2700	0.1
BCP2739		7/19/01	7.78		97	6690	2.00	757	1790	0.49		0.6	280		113		1147	2400	0.15
BCP2739		7/23/01	7.99		93	7090	0.60	834	1990	0.32		#VALUE!	327		136		1262	2850	0.06
BCP2739		7/27/01	7.82		90	8410	0.30	834	2040	0.10		#VALUE!	246		124		1360	2597	0.05
BCP2739		7/30/01	8.38		93	8100	0.10	817	2100	0.08		#VALUE!	280		140		1530	2875	#VALUE!
BCP2739		8/2/01	7.55		79	7400	1.70	776	1790	0.18		0.6	289		125		1290	2630	0.12
BCP2739		8/6/01	7.83		81	7570	#VALUE!	904	2250	1.04		#VALUE!	290		147		1547	2557	0.07
BCP2739		8/9/01	7.90		68	7030	1.70	814	2170	0.79		#VALUE!	279		136		1180	2819	0.08
BCP2739		8/13/01	7.36		64	7890	#VALUE!	856	2470	0.23		#VALUE!	324		147		1580	2462	0.07
BCP2739		8/16/01	7.40		80	7370	1.40	812	2000	0.20		#VALUE!	333		139		1300	2550	0.18
BCP2739		8/20/01	7.33		71	8190	1.00	974	2530	0.45		#VALUE!	332		165		1510	2530	0.09
BCP2739		8/23/01	7.40		82	7590	2.80	951	2160	0.40		0.4	415		169		1640	2620	0.18
BCP2739	D	8/27/01	7.88		80	6980	1.40	803	2060	0.95		0.4	263		127		1300	2530	0.05
BCP2739		8/30/01	7.88		61	7650	1.60	812	2190	0.72		0.44	310		147		1440	2830	0.09
BCP2739		9/6/01	7.39		78	8200	0.21	800	2260	0.94		#VALUE!	330		131		1460	2420	0.15
BCP2739		9/10/01	7.32		70	8170	0.10	828	2300	0.34		#VALUE!	368		137		1500	2750	0.11
BCP2739		9/13/01	7.80		70	7750	0.30	866	2070	0.27		#VALUE!	350		140		1430	2630	0.08
BCP2739		9/17/01	7.38		78	7350	0.20	828	2140	0.19		#VALUE!	388		136		1400	2590	0.07
BCP2739		9/24/01	6.78		65	8170	0.2	953	2320	0.13		#VALUE!	345		148		1510	2990	0.05
BCP2739		9/27/01	6.69		74	7960	3.2	969	2350	0.12		0.7	430		157		1750	2890	0.17
BCP2739		10/1/01	6.67		70	7340	0.1	819	1890	0.26		#VALUE!	334		130		1340	2520	0.06
BCP2739		10/4/01	6.67		88	7450	0.2	909	2090	0.13		#VALUE!	386		158		1580	2300	0.18
BCP2739		10/11/01	6.98		99	6170	0.2	663	1900	0.32		#VALUE!	268		121		1140	3000	0.14
BCP2739		10/18/01	7.14		93	7820	0.2	689	2360	0.07		1	326		137		1350	2740	0.05

KUCC WATER QUALITY RESULTS
THROUGH 11/7/01
SORTED BY LOCATION

Desc	Date	* pH (Field)	Acidity	Alkalinity	TDS	Aluminum	Calcium	Chloride	Copper	Fluoride	Iron	Magnesium	Manganese	Potassium	SiO2	Sodium	Sulfate	Zinc
	MDL	-0-	10	5	20	0.10	1	5	0.02	0.1	0.3	1	0.01	0.5	2	1	5	0.02
	UNITS	-0-	L as CaCO3	L as CaCO3	mg/L	mg/L	mg/L	mg/L	mg/L	mg/L	mg/L	mg/L	mg/L	mg/L	mg/L	mg/L	mg/L	mg/L
BCP2750		**TUF1 TO NP5**																
BCP2750	5/25/01	8.81		75	6090	0.30	881	1430	0.03	2.6	#VALUE!	184	0.05	130	14	864	2250	#VALUE!
BCP2750	5/29/01	8.78		75	6510	0.30	870	1730	#VALUE!	3.6	#VALUE!	205	0.09	132	11	1060	2090	#VALUE!
BCP2750	5/30/01	8.35		68	5980	2.70	954	1560	0.05	3.2	1.1	199	0.23	157	10	1040	1920	0.1
BCP2750	5/31/01	8.86		90	5020	1.60	910	1410	0.06	3.7	0.5	175	0.16	141	10	880	2340	0.06
BCP2750	6/1/01	8.95		80	5220	1.20	1010	1380	0.12	4.1	0.6	196	0.11	153	13	184	2280	0.04
BCP2750	6/2/01	8.95		43	5980	0.50	1180	1640	0.23	2.6	#VALUE!	179	0.02	178	16	1240	2470	#VALUE!
BCP2750	6/3/01	8.64		62	6550	8.20	1090	1800	1.19	2.8	1.4	140	0.66	179	12	1300	2510	0.3
BCP2750	6/4/01	9.20		66	6410	9.89	1050	1750	0.71	3.2	1.5	153	0.88	193	12	1300	2720	0.43
BCP2750	6/5/01	8.86		73	5070	7.00	1060	1600	0.85	4.6	1.8	192	0.61	174	9	1110	2430	0.26
BCP2750	6/6/01	8.87		69	6250	0.20	880	1510	1.70	4.2	#VALUE!	204	0.09	147	9	911	2400	0.03
BCP2750	6/7/01	8.81		84	6180	0.20	971	1500	2.40	4.4	#VALUE!	240	0.07	179	11	1100	2690	0.02
BCP2750	6/8/01	8.92		53	6300	14.90	960	1690	2.35	3.2	4.9	291	1.63	252	12	1070	2780	0.07
BCP2750	6/9/01	8.98		67	6510	0.20	895	1720	0.84	3.6	#VALUE!	163	0.04	143	15	932	2310	0.03
BCP2750	6/10/01	8.85		55	4910	0.70	1030	1780	0.29	3.4	#VALUE!	269	0.1	247	14	1200	2910	0.04
BCP2750	6/11/01	8.83		39	6310	0.30	1670	1580	0.15	3.1	#VALUE!	214	0.07	269	11	863	2230	0.03
BCP2750	6/12/01	9.00		33	5910	0.30	1490	1410	0.09	3	#VALUE!	231	0.06	239	13	937	2530	0.03
BCP2750	6/13/01	9.06		85	5790	#VALUE!	774	1300	0.70	3.3	0.2	138	0.03	146	10	952	2360	#VALUE!
BCP2750	6/14/01	8.89		69	5440	0.20	884	1250	0.05	4.1	#VALUE!	178	0.08	118	9	887	2420	0.03
BCP2750	6/15/01	8.80		46	6320	#VALUE!	652	1520	0.15	3.5	#VALUE!	200	0.04	143	13	745	2350	#VALUE!
BCP2750	6/19/01	8.67		79	6550	#VALUE!	809	1590	0.98		#VALUE!	180	0.04	184		888	2470	#VALUE!
BCP2750	6/21/01	8.85		62	6750	10.90	1000	1620	0.58		3.5	223		184		1140	2450	0.05
BCP2750	6/25/01	8.95		26	6460	0.90	1050	1650	0.06		#VALUE!	163		155		1100	2540	0.05
BCP2750	6/28/01	9.19		30	5650	#VALUE!	845	1320	0.03		#VALUE!	139		119		847	2290	#VALUE!
BCP2750	7/2/01	8.83		54	6790	1.10	798	1810	0.13		0.3	246		176		1020	2470	0.04
BCP2750	7/5/01	8.89		32	6710	6.80	935	1560	0.15		2.2	161		142		1000	2620	0.03
BCP2750	7/9/01	8.66		35	7050	7.00	972	2000	0.30		2.3	192		152		1267	2440	0.03
BCP2750	7/12/01	8.93		47	6040	#VALUE!	958	1650	0.09		#VALUE!	122		133		995	2190	#VALUE!
BCP2750	7/16/01	8.80		54	7230	#VALUE!	927	1790	0.02		#VALUE!	200		147		1220	2580	0.02
BCP2750	7/19/01	8.56		45	6530	8.60	946	1710	0.34		2	158		138		1027	2450	0.05
BCP2750	7/23/01	8.01		44	6800	0.30	938	1820	0.03		#VALUE!	218		144		1136	2600	0.04
BCP2750	7/27/01	8.52		56	8810	0.20	1080	1980	0.02		#VALUE!	150		148		1280	2288	#VALUE!
BCP2750	7/30/01	8.48		85	8110	#VALUE!	1110	2300	0.03		#VALUE!	168		180		1470	2714	#VALUE!
BCP2750	8/6/01	8.50		66	7250	#VALUE!	1097	2160	1.75		#VALUE!	172		161		1342	2541	#VALUE!
BCP2750	8/9/01	8.20		26	6780	6.60	944	1760	0.79		0.8	200		160		1080	2568	0.02
BCP2750	8/13/01	8.14		17	7450	#VALUE!	959	2170	0.11		#VALUE!	206		152		1360	2476	#VALUE!
BCP2750	8/16/01	8.96		33	7140	12.90	935	1910	2.05		1.8	190		153		1130	2740	0.05
BCP2750	8/20/01	8.72		41	7740	10.50	1040	2280	1.33		1.4	157		173		1360	2560	0.06
BCP2750	10/1/01	8.46		35	6550	#VALUE!	918	1640	0.34		#VALUE!	207		125		1120	2370	#VALUE!
BCP2750	10/4/01	8.65		77	7050	#VALUE!	868	1910	0.09		#VALUE!	205		146		1150	2511	#VALUE!
BCP2750	10/11/01	8.84		66	4880	#VALUE!	738	1730	0.27		#VALUE!	192		136		1020	2730	#VALUE!
BCP2750	10/18/01	8.46		40	6060	#VALUE!	787	1770	0.33		#VALUE!	224		116		1040	2500	#VALUE!
BCP2750	10/25/01	9.24		36	5450	PEND	702	1550	0.23		PEND	170		107		840	2460	0.07

KUCC WATER QUALITY RESULTS
THROUGH 11/7/01
SORTED BY LOCATION

Desc		Date	* pH (Field)	Acidity	Alkalinity	TDS	Aluminum	Calcium	Chloride	Copper	Fluoride	Iron	Magnesium	Manganese	Potassium	SiO2	Sodium	Sulfate	Zinc
		MDL	-0-	10	5	20	0.10	1	5	0.02	0.1	0.3	1	0.01	0.5	2	1	5	0.02
		UNITS	-0-	L as CaCO3	L as CaCO3	mg/L	mg/L	mg/L	mg/L	mg/L	mg/L	mg/L	mg/L	mg/L	mg/L	mg/L	mg/L	mg/L	mg/L
BYP2535			**NP6A**																
BYP2535		5/25/01	6.65		32	7200	0.20	974	1330	0.03	3	1.5	485	7.8	139	6	843	3330	0.06
BYP2535		5/29/01	6.98		76	7450	#VALUE!	983	1680	#VALUE!	3.1	1	405	4.5	134	6	1020	3410	#VALUE!
BYP2535		5/30/01	6.17		92	1130	1.20	820	1370	#VALUE!	1	40.5	633	15.4	148	8	813	4130	0.5
BYP2535		5/31/01	7.03		79	5530	0.80	979	1340	0.05	3.2	0.9	418	4.48	138	4	796	3750	0.04
BYP2535		6/1/01	6.57		70	5680	1.40	1060	1260	0.09	1.4	1.4	639	7.21	156	7	567	3780	0.08
BYP2535		6/2/01	7.30		90	6950	1.00	1350	1490	0.26	3.6	0.5	662	3.87	196	4	1260	3880	#VALUE!
BYP2535		6/3/01	6.74		57	8130	1.80	1000	1700	0.38	2	0.9	472	7.03	160	7	1070	3950	0.1
BYP2535		6/4/01	7.08		74	7920	2.30	1100	1640	0.18	2.7	0.8	797	12.7	197	7	1240	4630	0.17
BYP2535		6/5/01	5.58		#VALUE!	6950	2.30	1010	1370	0.65	3.1	32.4	786	14.2	177	20	982	4280	2.53
BYP2535		6/6/01	5.77		16	7450	0.50	770	1320	1.00	2	38.8	788	16.4	196	16	1000	4310	1.9
BYP2535		6/7/01	5.88		70	7320	0.40	1120	1280	1.80	1.7	41.3	865	22.8	191	13	921	4690	1.6
BYP2535		6/8/01	6.31		56	8400	3.10	1350	1520	1.54	1.9	5.9	898	11.7	249	8	1250	3870	0.32
BYP2535		6/9/01	6.51		59	8540	0.10	1020	1600	0.40	2.5	0.9	587	10.9	154	6	916	4040	0.11
BYP2535		6/10/01	6.13		46	7060	0.20	1320	1580	0.03	1.8	24.5	842	17	219	12	1240	3740	0.36
BYP2535		6/11/01	6.25		53	7710	0.20	1910	1480	0.09	1.9	0.5	860	13.8	284	10	916	3470	0.32
BYP2535		6/12/01	6.67		124	8200	0.50	1490	1310	0.07	4.1	2.2	657	10.6	202	7	753	4190	0.11
BYP2535		6/13/01	6.02		48	8490	<0.2	1040	1150	0.07	1.2	3.1	817	22.9	229	13	878	4260	0.54
BYP2535		6/14/01	6.20		43	8370	<0.2	940	1190	0.07	1.7	29.1	837	17.5	193	11	848	4380	0.35
BYP2535		6/15/01	6.29		49	8080	<0.2	835	1430	0.19	2.2	7.2	666	13.2	173	8	750	3700	0.09
BYP2535		6/19/01	6.36		57	7750	<0.2	891	1440	0.49		1.6	472	10.4	175		784	3810	0.07
BYP2535		6/21/01	7.06		96	7660	3.50	1040	1460	0.25		1.5	489		178		1140	3800	0.17
BYP2535		6/25/01	6.99		131	7530	<0.2	1220	1530	#VALUE!		#VALUE!	533		154		1120	3900	0.03
BYP2535		6/28/01	6.84		145	8130	<0.2	942	1200	0.07		0.5	547		117		703	4190	0.08
BYP2535		7/2/01	7.41		104	8430	0.20	906	1740	0.06		#VALUE!	407		116		865	3980	#VALUE!
BYP2535		7/5/01	6.31		112	8680	1.90	919	1430	0.08		6.9	595		139		854	4450	0.18
BYP2535		7/9/01	6.59		130	8170	2.70	1140	1800	0.15		9.5	541		146		1120	4110	0.18
BYP2535		7/12/01	6.76		144	8200	0.10	1120	1520	0.08		1.5	520		142		900	4200	0.04
BYP2535		7/16/01	6.87		144	8220	0.20	1070	1600	0.02		2.1	463		138		1100	3770	0.03
BYP2535		7/19/01	6.65		139	7740	2.70	851	1470	0.16		2.4	567		144		944	3630	0.2
BYP2535		7/23/01	6.25		66	8720	0.40	1000	1670	#VALUE!		12.5	590		147		1020	4070	0.15
BYP2535		7/27/01	7.00		106	7230	0.20	986	1720	0.49		#VALUE!	546		128		1110	4005	0.12
BYP2535		7/30/01	6.85		75	9040	0.10	1060	2000	0.03		2.9	510		166		1300	4080	0.06
BYP2535		8/2/01	6.52		137	8230	0.10	1010	1540	0.33		16.7	580		143		959	4128	#VALUE!
BYP2535		8/6/01	6.61		131	8590	0.10	1104	1880	1.55		#VALUE!	635		164		1233	5912	0.05
BYP2535		8/9/01	6.71		165	8200	2.50	1040	1660	0.45		2.3	568		157		931	4599	0.14
BYP2535		8/13/01	6.78		130	8520	<0.2	1160	2150	0.10		#VALUE!	464		158		1310	3820	0.03
BYP2535		8/16/01	6.13		87	9090	3.60	960	1780	0.73		2.8	732		154		1110	3930	0.44
BYP2535		8/20/01	6.40		116	9130	1.70	1040	2010	0.47		2.3	791		189		1250	4020	0.16
BYP2535		8/23/01	6.60		87	8980	8.00	1130	1840	1.12		1.3	569		171		1250	3930	#VALUE!
BYP2535	D	8/27/01	6.16		PEND	8460	4.60	1070	1680	0.24		11.2	815		154	12	1210	3800	0.72
BYP2535		8/30/01	6.10		130	8660	7.30	1010	1840	0.46		18.3	717		177		1180	3810	0.61
BYP2535		9/6/01	6.21		157	8560	0.50	878	1750	0.82		16.4	694		141		1050	3690	0.18
BYP2535		9/10/01	6.21		177	9460	#VALUE!	1030	1910	0.15		5	730		141		1240	4260	0.36
BYP2535		9/13/01	6.40		154	8560	0.20	1200	1720	0.12		4.9	862		175		1360	4360	0.16
BYP2535		9/17/01	6.25		130	8400	0.20	1180	1820	0.05		5	990		174		1460	4470	0.21
BYP2535		9/24/01	6.73		168	9820	0.2	1030	2000	0.04		1.3	808		157		1300	4340	0.09
BYP2535		9/27/01	6.34		138	9250	1.2	1220	1960	0.45		13.6	959		174		1510	4470	0.72
BYP2535		10/1/01	6.84		219	8060	#VALUE!	1180	1610	0.17		1.1	627		141		1120	4090	0.06
BYP2535		10/4/01	6.44		102	9200	#VALUE!	945	1830	0.11		11.6	817		171		1200	4550	0.21
BYP2535		10/11/01	6.38		76	55300	0.2	845	1650	0.07		25.2	620		153		962	4900	0.41
BYP2535		10/18/01	6.31		132	75600	0.5	924	1680	0.14		5.5	790		137		1030	4740	0.46
BYP2535		10/25/01	6.44		151	8180	1.2	790	1450	PEND		PEND	697		121		781	4860	PEND

KUCC WATER QUALITY RESULTS
THROUGH 11/7/01
SORTED BY LOCATION

Desc	Date	* pH (Field)	Acidity	Alkalinity	TDS	Aluminum	Calcium	Chloride	Copper	Fluoride	Iron	Magnesium	Manganese	Potassium	SiO2	Sodium	Sulfate	Zinc
	MDL	-0-	10	5	20	0.10	1	5	0.02	0.1	0.3	1	0.01	0.5	2	1	5	0.02
	UNITS	-0-	L as CaCO3	L as CaCO3	mg/L	mg/L	mg/L	mg/L	mg/L	mg/L	mg/L	mg/L	mg/L	mg/L	mg/L	mg/L	mg/L	mg/L
BYP2538		**WWDP + 31.5" LINE TO NP5**																
BYP2538	5/25/01	3.72	6750	#VALUE!	21200	1090	646	171	21.90	18.5	418	3270	100	17.1	51	83.6	15600	51.2
BYP2538	5/29/01	3.89	8890	#VALUE!	28800	1600	592	191	86.80	3.7	618	4480	145	14.8	58	74.8	18300	72.3
BYP2538	5/30/01	3.86	9760	#VALUE!	30000	1400	601	166	19.60	0.4	438	4110	132	16	62	70.7	17500	61.8
BYP2538	5/31/01	3.92	6160	#VALUE!	19700	998	591	136	21.80	17.6	351	2730	77	15.9	49	64.4	13600	37.1
BYP2538	6/1/01	3.82	7830	#VALUE!	21500	1030	607	158	68.40	4.8	231	3190	89.8	18	56	67.4	17300	45.1
BYP2538	6/2/01	3.76	7120	#VALUE!	25400	1120	664	155	51.90	15.9	243	3740	90.3	15.3	55	65	17500	44.9
BYP2538	6/3/01	3.10	11000	#VALUE!	33500	1810	596	159	127.00	2.9	308	4430	165	18.1	66	66.2	21900	63.8
BYP2538	6/4/01	3.88	12100	#VALUE!	34800	2120	595	175	124.00	2.4	299	4840	188	12.3	70	57.5	26400	71.6
BYP2538	6/5/01	3.86	8720	#VALUE!	27200	1680	592	158	47.30	31.8	496	3630	88.2	12.9	60	55.5	18300	50.3
BYP2538	6/6/01	3.85	8920	#VALUE!	27100	1240	468	152	63.90	33.6	431	3590	129	7.9	54	72.4	16300	62.4
BYP2538	6/7/01	3.77	10400	#VALUE!	30300	1430	533	157	23.20	35.5	555	4020	165	10.6	57	89	21700	72.3
BYP2538	6/8/01	3.78	13100	#VALUE!	32700	1420	545	155	25.60	34.7	439	4070	124	7	65	76.9	23400	60
BYP2538	6/9/01	3.75	14200	#VALUE!	36400	1740	471	164	33.30	36.1	PEND	4890	197	5.3	70	63.9	23100	91.3
BYP2538	6/10/01	3.83	10600	#VALUE!	26400	1250	518	118	30.60	33.3	491	3290	140	8.9	56	60.2	16200	59.9
BYP2538	6/11/01	3.80	9900	#VALUE!	25700	1110	488	145	29.70	32.3	388	4380	121	6.18	53	68.8	15200	48.9
BYP2538	6/12/01	3.88	11900	#VALUE!	32500	1390	554	156	32.50	34.8	650	4380	157	7.02	58	75	18800	56.5
BYP2538	6/13/01	3.82	12900	#VALUE!	33700	1580	481	172	35.80	35	736	3760	176	8.3	62	74.7	23600	82.1
BYP2538	6/14/01	3.81	15500	#VALUE!	40600	1950	534	167	68.90	36.1	662	5140	209	10.8	71	75.9	30100	94.8
BYP2538	6/15/01	3.64	13700	#VALUE!	34000	1600	403	154	31.40	35.4	539	3960	178	8	65	61	21800	79.2
BYP2538	6/19/01	3.71	12300	#VALUE!	30100	1380	424	199	23.00		545	3490	150	7		66	21200	70.4
BYP2538	6/21/01	8.14	10300	#VALUE!	25000	1090	422	145	31.50		472	2980		8		83	16500	60.8
BYP2538	6/25/01	3.83	15000	#VALUE!	35200	1590	461	160	31.20		714	4670		6.7		62	24500	86.2
BYP2538	6/28/01	3.65	9130	#VALUE!	33300	1590	474	159	42.00		688	3510		4.7		63	21800	87
BYP2538	7/2/01	3.68	11700	#VALUE!	40600	1900	553	179	78.00		598	4050		3		74	28500	104
BYP2538	7/5/01	3.66	11400	#VALUE!	39300	1830	497	166	27.40		391	4300		5.4		71	24300	59.2
BYP2538	7/9/01	3.70	8480	#VALUE!	29400	1360	496	151	30.00		531	3230		6.4		67	17600	70
BYP2538	7/12/01	3.74	7530	#VALUE!	24300	1220	462	147	18.90		435	2560		6.6		63	15300	61.4
BYP2538	7/16/01	3.75	5860	#VALUE!	22200	1120	504	121	29.00		426	3180		1		60	18400	59
BYP2538	7/19/01	3.68	8950	#VALUE!	30900	1850	525	167	34.30		327	3830		3.3		64	21900	48.2
BYP2538	7/23/01	3.63	10600	#VALUE!	33700	1770	473	157	34.00		678	3760		1.3		62	22800	97
BYP2538	7/27/01	3.78	10300	#VALUE!	31300	1410	510	157	43.00		634	345		6.7		65	18899	80
BYP2538	7/30/01	3.78	8060	#VALUE!	27000	1240	493	180	27.00		529	2810		5.2		59.8	17121	77
BYP2538	8/2/01	3.68	7520	#VALUE!	29040	1280	555	197	23.90		460	3260		6.4		71	18269	69.6
BYP2538	8/6/01	3.66	7960	#VALUE!	23900	1220	441	176	169.00		392	2930		4.9		60	16858	65.9
BYP2538	8/9/01	3.27	7860	#VALUE!	23400	1180	454	175	109.00		114	2550		6.2		54	16724	45.4
BYP2538	8/13/01	3.23	9070	#VALUE!	26100	1220	467	138	116.00		131	2680		6		58	17398	61
BYP2538	8/16/01	3.16	11900	#VALUE!	39200	1880	523	171	178.00		248	4290		4.4		61	25100	60.5
BYP2538	8/20/01	3.25	10900	#VALUE!	32800	1570	480	159	144.00		194	3510		5		60	21300	86.5
BYP2538	8/23/01	3.30	12500	#VALUE!	27400	1260	677	150	136.00		150	3950		11		84	17500	51
BYP2538	8/27/01	3.82	13300	#VALUE!	26200	1330	635	155	32.80		279	3810		8.2	55	83.2	18300	48.4
BYP2538	8/30/01	3.68	9080	#VALUE!	29100	1360	540	151	28.20		427	3610		6.9		67	19900	70
BYP2538	9/6/01	3.40	13900	#VALUE!	42200	2160	499	175	114.00		420	5290		6.1		63	26800	107
BYP2538	9/10/01	3.24	11900	#VALUE!	35400	1670	472	130	129.00		234	3890		6		55	24000	82.7
BYP2538	9/13/01	3.53	11800	#VALUE!	36600	1720	671	123	52.50		422	5770		8.7		83	24000	88.4
BYP2538	9/17/01	3.44	13000	#VALUE!	38000	1900	603	162	79.70		418	5700		7.9		76	26700	95.6
BYP2538	9/24/01	3.41	20700	#VALUE!	64700	3020	545	190	72.2		836	7920		6.8		61	41500	148
BYP2538	9/27/01	3.29	19900	#VALUE!	62200	2800	508	181	91.9		770	7890		5.3		57	40400	147
BYP2538	10/1/01	3.15	19900	#VALUE!	61600	3030	480	171	103		653	7500		4.5		55	38600	148
BYP2538	10/4/01	3.15	19200	#VALUE!	58000	2660	474	174	49.8		933	6790		5		58	35400	133
BYP2538	10/11/01	3.49	15700	#VALUE!	46600	2110	411	174	145		598	5280		1.9		52	37500	123
BYP2538	10/18/01	3.37	18200	#VALUE!	52400	2480	497	176	164		539	6940		4.5		59	35500	76
BYP2538	10/25/01	3.55	20300	#VALUE!	56800	2860	393	178	68		PEND	5740		3.5		39	37100	82

KUCC WATER QUALITY RESULTS
THROUGH 11/7/01
SORTED BY LOCATION

Desc	Date	* pH (Field)	Acidity	Alkalinity	TDS	Aluminum	Calcium	Chloride	Copper	Fluoride	Iron	Magnesium	Manganese	Potassium	SiO2	Sodium	Sulfate	Zinc
	MDL	-0-	10	5	20	0.10	1	5	0.02	0.1	0.3	1	0.01	0.5	2	1	5	0.02
	UNITS	-0-	L as CaCO3	L as CaCO3	mg/L	mg/L	mg/L	mg/L	mg/L	mg/L	mg/L	mg/L	mg/L	mg/L	mg/L	mg/L	mg/L	mg/L
ECP2725		**WTP TO WDPS**																
ECP2725	6/1/01	7.57		930	12000	#VALUE!	2580	711	0.06	0.7	#VALUE!	975	0.03	32.3	102	410	6470	0.02
ECP2725	6/6/01	3.26	27200	#VALUE!	88500	3950	653	223	236	83.5	1080	8760	638	20.8	107	87.1	50600	237
ECP2725	6/8/01	3.21	25800	#VALUE!	72000	2770	708	208	189	83.6	503	10700	#VALUE!	14.8	79	71.6	51900	115
ECP2725	6/9/01	3.25	29000	#VALUE!	74200	3490	599	208	216	84.8	919	10300	536	13	86	57.3	46400	230
ECP2725	6/11/01	3.21	31300	#VALUE!	74300	3610	646	214	219	85.7	920	9750	545	12.6	88	62	46900	217
ECP2725	6/12/01	3.28	29100	#VALUE!	79300	3530	742	213	216			4380		18.3		81.3	43700	224
ECP2725	6/13/01	3.27	31900	#VALUE!	78500	3790	753	212	237			9430		19.2		77.6	53500	241
ECP2725	6/14/01	3.29	31200	#VALUE!	75900	3630	690	205	223			9240		20.3		80.3	51000	226
ECP2725	6/15/01	3.15	31800	#VALUE!	75700	3720	612	204	226			9170		10.8		63	46600	232
ECP2725	6/19/01	3.20	32500	#VALUE!	76400	3550	551	139	213			8750		17.1		66	47600	222
ECP2725	6/21/01	3.20	31800	#VALUE!	73400	3430	521	196	207		905	9000		13.1		66	49300	212
ECP2725	6/25/01	3.26	31500	#VALUE!	73500	3360	582	200	201		859	8790		11.8		58	48600	212
ECP2725	6/28/01	3.27	10900	#VALUE!	74300	3570	672	205	217		970	7730		11		61	47300	224
ECP2725	7/2/01	3.21	21200	#VALUE!	71900	3640	626	206	224		951	7450		11		58	44800	233
ECP2725	7/9/01	3.23	21800	#VALUE!	71900	3610	524	198	210		921	8044		11.2		56	46100	219
ECP2725	7/12/01	3.32	20900	#VALUE!	66100	3330	508	193	204		881	7820		11		55	40800	213
ECP2725	7/16/01	3.27	18600	#VALUE!	68500	3100	501	172	196		833	7270		10.7		55	44100	204
ECP2725	7/19/01	3.17	20000	#VALUE!	69700	3180	514	202	190		384	7422		10.5		55	43200	79.1
ECP2725	7/23/01	3.34	19800	#VALUE!	62500	3130	506	188	192		845	7311		10.1		52	40800	203
ECP2725	7/27/01	3.40	20900	#VALUE!	64100	2980	503	189	186		788	7270		10.9		53.6	41527	194
ECP2725	7/30/01	3.36	22700	#VALUE!	67400	3100	470	270	192		808	7200		10		49.5	42762	201
ECP2725	8/2/01	3.29	19000	#VALUE!	78200	3120	512	276	193		778	8800		11		55	42272	183
ECP2725	8/6/01	3.43	20200	#VALUE!	64100	3170	506	275	197		788	8800		11.1		56	40289	206
ECP2725	8/9/01	3.35	21400	#VALUE!	67600	3190	532	275	177		407	7890		11		56	52158	89.9
ECP2725	8/13/01	3.37	22200	#VALUE!	65600	3070	690	200	197		821	7700		13.7		67	49555	188
ECP2725	8/16/01	3.30	19100	#VALUE!	67100	3140	496	197	196		800	8900		10.8		55	47000	82.3
ECP2725	8/20/01	3.31	20200	#VALUE!	66100	3030	511	195	186		770	7780		11		55	39700	192
ECP2725	8/23/01	3.23	18300	#VALUE!	65600	2940	743	194	192		799	8370		17.2		71.6	38300	201
ECP2725	8/27/01	3.43	24600	#VALUE!	65300	3170	538	190	179		788	8020		12	91	60.1	42900	91.7
ECP2725	8/30/01	3.41	19300	#VALUE!	63900	2920	656	190	187		757	7380		12.6		64	41200	190
ECP2725	9/6/01	3.40	21300	#VALUE!	67200	2230	569	199	116		426	6410		10.5		55	36800	106
ECP2725	9/10/01	3.32	22200	#VALUE!	66300	3050	687	165	187		774	7870		12.2		66	43200	196
ECP2725	9/13/01	3.42	20600	#VALUE!	64300	2990	741	157	196		796	8730		14.5		74	41900	203
ECP2725	9/17/01	3.39	21000	#VALUE!	64300	2990	749	197	192		779	8710		15.1		75	43100	201
ECP2725	9/24/01	3.51	20200	#VALUE!	68500	3000	711	194	194		778	8080		17.9		89	43300	201
ECP2725	10/1/01	3.37	18700	#VALUE!	65000	3200	755	180	189		851	8670		19.1		94	41700	197
ECP2725	10/4/01	3.27	20600	#VALUE!	65000	2990	710	198	186		758	7860		18.5		97	44900	195
ECP2725	10/11/01	3.39	19400	#VALUE!	63600	2760	618	200	193		751	6950		14.1		76	54200	201
ECP2725	10/18/01	3.3	21000	#VALUE!	65100	2900	758	193	183		750	8550		15.9		75	40900	98
ECP2725	10/25/01	3.33	21100	#VALUE!	59400	2980	567	203	190		PEND	6320		12.5		56	42400	199

KUCC WATER QUALITY RESULTS
THROUGH 11/7/01
SORTED BY LOCATION

Desc		Date	* pH (Field)	Acidity	Alkalinity	TDS	Aluminum	Calcium	Chloride	Copper	Fluoride	Iron	Magnesium	Manganese	Potassium	SiO2	Sodium	Sulfate	Zinc
		MDL	-0-	10	5	20	0.10	1	5	0.02	0.1	0.3	1	0.01	0.5	2	1	5	0.02
		UNITS	-0-	L as CaCO3	L as CaCO3	mg/L	mg/L	mg/L	mg/L	mg/L	mg/L	mg/L	mg/L	mg/L	mg/L	mg/L	mg/L	mg/L	mg/L
MCP2536			**NORTH SPLITTER BOX**																
MCP2536		5/25/01	7.08		105	7500	0.30	1220	1320	#VALUE!	3.6	#VALUE!	258	7.8	201	4	1360	3260	0.03
MCP2536		5/29/01	7.47		100	6720	0.20	1210	1660	#VALUE!	4.7	#VALUE!	466	2.3	200	4	1430	2820	#VALUE!
MCP2536		5/30/01	6.67		52	7570	1.20	916	1380	0.04	1.2	2.2	752	14.5	176	6	1030	3670	0.08
MCP2536		5/31/01	7.51		66	4890	0.50	1100	1370	0.06	3.9	#VALUE!	455	3.23	172	4	1060	3600	#VALUE!
MCP2536		6/1/01	7.04		47	4580	2.80	1010	1270	0.43	3.6	2.4	601	6.13	173	4	977	3600	0.06
MCP2536		6/2/01	7.58		78	4860	1.00	1140	1510	0.11	4.6	0.4	579	3.79	182	3	1170	3520	#VALUE!
MCP2536		6/3/01	7.00		39	6370	0.80	1040	1710	0.06	3.3	#VALUE!	606	7.16	191	4	1260	3820	0.04
MCP2536		6/4/01	7.16		46	5810	0.60	1040	1650	0.06	3.6	#VALUE!	654	7.56	193	5	1200	3810	0.04
MCP2536		6/5/01	6.68		28	6780	0.40	1080	1430	0.38	2.9	#VALUE!	688	9.55	190	6	1080	3740	0.08
MCP2536		6/6/01	6.09		#VALUE!	7560	#VALUE!	790	1340	0.78	2.5	18.3	605	19.3	157	12	864	3940	0.43
MCP2536		6/7/01	6.53		56	4690	0.20	825	1300	2.00	4.2	1.2	789	21.3	187	7	935	4330	0.12
MCP2536		6/8/01	6.95		45	7170	0.90	781	1520	1.48	5.3	#VALUE!	558	8.58	154	4	872	4090	0.07
MCP2536		6/9/01	7.09		49	8170	0.20	903	1630	0.19	3.4	#VALUE!	662	11.1	178	4	1030	3560	0.04
MCP2536		6/10/01	8.45		33	6680	0.80	929	1570	#VALUE!	4.2	#VALUE!	278	0.32	154	2	931	2560	0.05
MCP2536		6/11/01	6.48		22	7590	#VALUE!	1200	1470	0.06	2.1	#VALUE!	775	14.4	243	7	950	3340	0.14
MCP2536		6/12/01	7.24		82	7640	0.30	1610	1320	#VALUE!	3.6	#VALUE!	712	7.31	233	3	807	4040	0.03
MCP2536		6/13/01	6.36		24	7850	#VALUE!	927	1150	0.26	1.6	9.1	799	24.3	211	8	800	4490	0.2
MCP2536		6/14/01	6.75		36	7530	#VALUE!	1090	1230	0.04	2.5	0.4	613	11.6	168	5	848	4050	0.04
MCP2536		6/15/01	6.85		45	8380	0.10	883	1430	0.05	3	#VALUE!	723	10.7	213	4	888	3880	#VALUE!
MCP2536		6/19/01	6.92		44	7570	#VALUE!	757	1520	0.50		#VALUE!	532	8.4	180		798	3550	0.04
MCP2536		6/21/01	7.38		74	7650	0.90	690	1460	0.12		#VALUE!	624		142		882	3660	0.07
MCP2536		6/25/01	7.37		101	7350	0.10	925	1510	#VALUE!		#VALUE!	500		146		943	3600	#VALUE!
MCP2536		6/28/01	7.27		111	7490	0.20	776	1230	#VALUE!		#VALUE!	549		119		712	3890	0.03
MCP2536		7/2/01	7.34		121	8430	0.30	919	1780	0.03		#VALUE!	498		140		987	4080	#VALUE!
MCP2536		7/5/01	6.90		73	7970	0.50	733	1450	0.02		#VALUE!	564		139		854	3930	0.03
MCP2536		7/9/01	7.21		94	7920	0.40	1000	1870	0.03		#VALUE!	487		145		1120	3750	0.03
MCP2536		7/12/01	7.41		113	7390	0.10	1030	1540	0.09		#VALUE!	396		140		967	3520	#VALUE!
MCP2536		7/16/01	7.37		113	7720	0.20	1020	1530	#VALUE!		#VALUE!	416		152		1100	3450	#VALUE!
MCP2536		7/19/01	7.16		79	7020	0.60	884	1490	0.07		#VALUE!	445		145		977	3480	0.05
MCP2536		7/23/01	6.46		43	8030	#VALUE!	905	1660	#VALUE!		#VALUE!	581		147		1044	3970	0.05
MCP2536		7/27/01	7.30		81	8070	0.20	804	1710	0.12		#VALUE!	527		134		1290	3580	0.04
MCP2536		7/30/01	7.10		53	8730	0.10	886	2020	#VALUE!		#VALUE!	505		171		1300	3848	0.03
MCP2536		8/2/01	7.08		61	7500	0.50	787	1450	0.12		#VALUE!	545		137		979	3456	0.05
MCP2536		8/6/01	6.95		73	8050	0.10	842	1890	1.19		#VALUE!	591		161		1214	3422	0.03
MCP2536		8/9/01	7.03		96	7690	1.00	927	1200	0.25		#VALUE!	550		160		945	3683	0.04
MCP2536		8/13/01	7.35		94	8220	0.20	1170	2130	0.04		#VALUE!	504		174		1430	3625	#VALUE!
MCP2536		8/16/01	6.78		63	8530	0.50	507	1760	0.18		#VALUE!	477		102		706	3940	0.08
MCP2536		8/20/01	7.11		66	8790	0.50	865	2030	0.32		#VALUE!	723		186		1230	3620	0.03
MCP2536		8/23/01	7.00		44	8370	0.90	880	1820	0.22		0.1	620		171		1220	3630	0.07
MCP2536	D	8/27/01	6.76		49	8090	0.40	768	1690	0.11		#VALUE!	725	16.5	138		1150	4200	0.06
MCP2536		8/30/01	6.80		64	8570	0.20	873	1850	0.17		#VALUE!	741		188		1310	3630	0.03
MCP2536		9/6/01	7.01		77	8340	0.10	711	1770	2.09		#VALUE!	676		140		1070	3330	0.04
MCP2536		9/10/01	7.05		84	8370	#VALUE!	837	1910	0.06		#VALUE!	636		133		1210	3620	0.05
MCP2536		9/13/01	7.13		76	7850	0.10	1100	1720	0.04		#VALUE!	810		175		1370	3860	0.03
MCP2536		9/17/01	6.81		63	8430	#VALUE!	884	1830	0.05		#VALUE!	789		145		1210	4020	0.05
MCP2536		9/24/01	7.25		96	9150	#VALUE!	782	1980	0.03		#VALUE!	768		153		1270	4050	0.03
MCP2536		9/27/01	6.95		72	8950	0.7	900	1980	0.03		#VALUE!	769		156		1330	4150	0.06
MCP2536		10/1/01	7.35		139	7850	#VALUE!	980	1620	0.09		#VALUE!	647		145		1200	3630	0.03
MCP2536		10/4/01	6.89		46	6050	#VALUE!	742	1770	0.04		0.3	846		166		1150	4160	0.06
MCP2536		10/11/01	6.9		24	1240	0.1	879	1650	0.1		1.7	733		181		1140	4760	0.11
MCP2536		10/18/01	7.02		61	83000	#VALUE!	707	1710	0.09		#VALUE!	713		130		981	4290	0.08
MCP2536		10/25/01	6.82		80	7190	PEND	613	1440	1.1		PEND	728		128		807	4420	0.12

KUCC WATER QUALITY RESULTS
THROUGH 11/7/01
SORTED BY LOCATION

Desc		Date	* pH (Field)	Acidity	Alkalinity	TDS	Aluminum	Calcium	Chloride	Copper	Fluoride	Iron	Magnesium	Manganese	Potassium	SiO2	Sodium	Sulfate	Zinc
		MDL	-0-	10	5	20	0.10	1	5	0.02	0.1	0.3	1	0.01	0.5	2	1	5	0.02
		UNITS	-0-	L as CaCO3	L as CaCO3	mg/L	mg/L	mg/L	mg/L	mg/L	mg/L	mg/L	mg/L	mg/L	mg/L	mg/L	mg/L	mg/L	mg/L
TLP1487		**WEST CYCLONE UNDERFLOW**																	
TLP1487		5/25/01	8.19		74	7950	0.30	869	1760	#VALUE!	5.2	#VALUE!	478	2.3	133	2	1110	3360	#VALUE!
TLP1487		5/29/01	7.69		87	7960	0.20	894	1880	0.04	4.8	#VALUE!	432	2.2	131	3	1170	3080	#VALUE!
TLP1487		5/30/01	7.58		69	8000	0.80	795	1720	0.06	3.9	0.4	476	3.63	130	3	1020	3190	0.02
TLP1487		5/31/01	8.07		62	7220	0.80	926	1680	0.04	4.4	#VALUE!	403	1.14	132	3	997	3190	#VALUE!
TLP1487		6/1/01	7.80		56	7080	0.60	1050	1860	0.06	4.9	#VALUE!	570	2.61	157	3	1350	3420	#VALUE!
TLP1487		6/2/01	7.76		64	7720	0.60	1180	1980	0.05	4.8	#VALUE!	656	2.36	187	3	1690	3360	#VALUE!
TLP1487		6/3/01	8.21		59	8300	0.60	1210	2080	0.03	3.9	#VALUE!	371	0.22	176	4	1550	3470	0.02
TLP1487		6/4/01	7.46		65	7890	0.60	880	1950	0.08	3.7	#VALUE!	575	4.84	166	4	1510	3240	0.04
TLP1487		6/5/01	6.92		50	7270	0.40	838	1770	0.14	2.5	#VALUE!	503	5.63	150	7	1220	3060	0.07
TLP1487		6/6/01	6.75		39	7600	#VALUE!	664	1690	0.44	2.3	0.9	438	9.2	125	6	999	3240	0.94
TLP1487		6/7/01	8.15		43	7580	0.70	1040	1740	0.44	4.7	#VALUE!	514	4.9	173	2	1210	3600	#VALUE!
TLP1487		6/8/01	7.65		50	8110	1.40	779	2020	0.36	4.3	#VALUE!	469	3.08	146	3	1110	3570	0.05
TLP1487		6/9/01	8.19		33	8460	0.70	1190	2080	0.08	4.9	#VALUE!	495	3.6	182	2	1530	3180	0.02
TLP1487		6/10/01	8.54		44	7930	0.70	972	1910	#VALUE!	4.9	#VALUE!	414	1.9	148	2	1090	3070	#VALUE!
TLP1487		6/11/01	6.87		47	7580	#VALUE!	957	1730	0.07	2.7	#VALUE!	559	8.23	184	6	981	2890	0.07
TLP1487		6/12/01	7.45		87	7740	0.30	1180	1700	#VALUE!	4.2	#VALUE!	518	3.79	189	4	939	3390	#VALUE!
TLP1487		6/14/01	6.82		53	7580	#VALUE!	890	1720	0.03	2.7	#VALUE!	621	7.3	187	6	1150	3480	0.05
TLP1487		6/15/01	7.83		46	8210	0.70	800	1940	0.03	5.2	#VALUE!	582	3	193	2	1180	3290	#VALUE!
TLP1487		6/19/01	7.04		62	8170	0.20	664	1860	0.15		#VALUE!	478	4.7	157		964	3340	0.03
TLP1487		6/21/01	7.81		79	8530	1.20	600	2010	0.07		#VALUE!	540		138		1120	3690	0.05
TLP1487		6/25/01	7.60		106	7160	#VALUE!	841	1680	#VALUE!		#VALUE!	429		135		1160	3020	#VALUE!
TLP1487		6/28/01	7.40		93	8070	0.10	834	1630	0.04		#VALUE!	501		123		954	3650	#VALUE!
TLP1487		7/2/01	7.39		110	8490	0.30	851	1930	0.02		#VALUE!	633		174		1070	3910	0.02
TLP1487		7/5/01	7.15		75	8160	0.70	791	1620	#VALUE!		#VALUE!	517		142		1004	3740	0.03
TLP1487		7/9/01	7.27		80	8110	0.40	949	2040	0.04		#VALUE!	475		149		1310	3560	0.04
TLP1487		7/12/01	7.28		91	8110	#VALUE!	903	1780	0.04		#VALUE!	501		140		1030	3540	0.02
TLP1487		7/19/01	7.05		60	7640	0.80	854	1740	0.09		#VALUE!	459		143		1054	3240	0.06
TLP1487		7/23/01	6.69		46	8330	0.10	931	1850	#VALUE!		#VALUE!	587		153		1203	3820	0.04
TLP1487		7/27/01	7.44		64	8320	0.10	787	1960	0.04		#VALUE!	516		140		1290	3772	0.04
TLP1487		7/30/01	7.20		54	8800	0.20	805	2080	#VALUE!		#VALUE!	485		150		1370	3620	0.02
TLP1487		8/2/01	7.24		59	8500	0.60	795	1870	0.05		#VALUE!	538		145		1285	3353	0.04
TLP1487		8/6/01	6.86		71	8380	0.20	874	2070	0.53		#VALUE!	528		157		1396	3281	0.02
TLP1487		8/9/01	7.01		64	8650	1.20	802	2130	0.12		#VALUE!	585		157		1250	3674	0.06
TLP1487		8/13/01	7.22		81	8320	#VALUE!	974	2160	0.03		#VALUE!	519		168		1440	3503	#VALUE!
TLP1487		8/16/01	6.79		44	8820	0.80	678	2000	0.09		#VALUE!	524		134		1320	3800	0.08
TLP1487		8/20/01	6.81		54	8680	0.70	723	2190	0.16		#VALUE!	580		156		1340	3460	0.04
TLP1487		8/23/01	6.98		52	8690	0.90	988	2080	0.24		0.1	593		178		1450	3420	0.06
TLP1487	D	8/27/01	6.95		56	7860	0.50	910	2010	0.03		#VALUE!	627		161		1230	3900	#VALUE!
TLP1487		8/30/01	6.79		59	8590	0.70	738	2130	0.06		#VALUE!	564		158		1240	3650	0.06
TLP1487		9/6/01	7.15		62	8770	#VALUE!	741	2120	0.74		#VALUE!	580		143		1280	3100	0.03
TLP1487		9/10/01	7.04		69	8950	#VALUE!	848	2090	0.05		#VALUE!	628		152		1400	3580	0.04
TLP1487		9/13/01	7.02		64	8270	0.20	890	2060	0.04		#VALUE!	649		161		1370	3640	0.03
TLP1487		9/17/01	6.75		61	8720	0.10	902	2190	0.03		#VALUE!	708		162		1470	3620	0.04
TLP1487		9/24/01	7.15		80	9280	0.2	963	2240	#VALUE!		#VALUE!	820		178		1670	3700	#VALUE!
TLP1487		9/27/01	7.09		56	9180	0.9	850	2290	0.03		#VALUE!	681		158		1460	3950	0.06
TLP1487		10/1/01	7.35		96	8810	0.1	775	1950	0.04		#VALUE!	662		147		1310	3610	0.04
TLP1487		10/4/01	6.87		41	9450	#VALUE!	759	2120	0.02		#VALUE!	777		169		1380	3720	0.07
TLP1487		10/11/01	7.05		48	7990	#VALUE!	801	2160	0.04		#VALUE!	573		154		1270	4650	0.03
TLP1487		10/18/01	6.95		61	7800	0.3	646	1950	0.04		#VALUE!	600		128		1110	3630	0.06
TLP1487		10/25/01	6.92		61	8240	PEND	626	1960	PEND		PEND	616		128		1080	4150	PEND

KUCC WATER QUALITY RESULTS
THROUGH 11/7/01
SORTED BY LOCATION

Desc		Date	* pH (Field)	Acidity	Alkalinity	TDS	Aluminum	Calcium	Chloride	Copper	Fluoride	Iron	Magnesium	Manganese	Potassium	SiO2	Sodium	Sulfate	Zinc
		MDL	-0-	10	5	20	0.10	1	5	0.02	0.1	0.3	1	0.01	0.5	2	1	5	0.02
		UNITS	-0-	L as CaCO3	L as CaCO3	mg/L	mg/L	mg/L	mg/L	mg/L	mg/L	mg/L	mg/L	mg/L	mg/L	mg/L	mg/L	mg/L	mg/L
TLP1488			**WEST CYCLONE OVERFLOW**																
TLP1488		5/25/01	8.27		50	7730	0.30	921	1740	0.03	5.2	#VALUE!	481	2.1	135	2	1120	3350	#VALUE!
TLP1488		5/29/01	7.78		71	8180	0.10	897	1880	0.05	4.8	#VALUE!	438	2.3	131	3	1180	3100	0.02
TLP1488		5/30/01	7.58		72	8250	1.80	759	1740	0.13	3.6	1.3	514	5.55	131	3	1020	3600	0.05
TLP1488		5/31/01	8.17		62	6940	0.70	1030	1690	0.14	4.4	#VALUE!	451	1.46	144	3	1120	3120	#VALUE!
TLP1488		6/1/01	7.77		56	7210	0.80	1090	1850	0.08	4.9	#VALUE!	595	2.6	161	3	1390	3420	#VALUE!
TLP1488		6/2/01	7.79		64	7120	0.60	1280	2000	0.10	4.8	#VALUE!	722	2.51	193	3	1800	3370	#VALUE!
TLP1488		6/3/01	8.38		56	7510	0.70	1080	2070	0.03	3.9	#VALUE!	368	0.27	163	3	1460	3490	0.02
TLP1488		6/4/01	7.40		64	7830	0.70	881	1960	0.07	3.7	#VALUE!	575	4.55	167	4	1510	3820	0.04
TLP1488		6/5/01	6.94		48	6790	0.60	931	1780	0.15	2.8	2	563	5.63	154	7	1360	3210	0.19
TLP1488		6/6/01	6.84		40	7890	#VALUE!	728	1690	0.46	2.5	0.4	481	9.2	137	6	1070	3230	0.09
TLP1488		6/7/01	8.17		44	7520	0.50	925	1730	0.43	4.8	#VALUE!	497	4.6	157	2	1180	3610	#VALUE!
TLP1488		6/8/01	7.81		49	8020	1.70	816	2020	0.47	4.4	0.4	478	3.2	150	3	1090	3540	0.08
TLP1488		6/9/01	7.90		33	8460	0.60	989	2080	0.09	4.7	#VALUE!	423	3.8	152	2	1510	3190	0.03
TLP1488		6/10/01	8.95		38	7650	0.60	931	1890	#VALUE!	3.8	#VALUE!	308	0.5	138	2	1070	2810	#VALUE!
TLP1488		6/11/01	6.82		39	7670	0.20	1120	1720	0.07	2.4	#VALUE!	692	9.52	219	7	976	2670	0.13
TLP1488		6/12/01	7.59		86	7700	0.30	1230	1690	0.02	4.3	#VALUE!	570	3.76	210	4	1040	3400	0.03
TLP1488		6/14/01	6.84		51	7670	#VALUE!	893	1740	0.04	2.7	#VALUE!	515	7.4	148	6	1170	3280	0.04
TLP1488		6/15/01	7.96		46	8050	0.60	920	1940	0.04	5	#VALUE!	529	3.5	163	2	978	3260	#VALUE!
TLP1488		6/19/01	7.11		62	8200	0.10	671	1840	0.16		#VALUE!	400	4.8	161		973	3220	0.02
TLP1488		6/21/01	7.72		86	8200	1.50	626	1990	0.11		0.4	358		110		1540	3360	0.07
TLP1488		6/25/01	7.59		104	7130	0.20	818	1680	0.02		#VALUE!	421		131		1270	3020	#VALUE!
TLP1488		6/28/01	7.43		92	8020	0.20	812	1590	0.05		#VALUE!	503		121		933	3610	0.03
TLP1488		7/2/01	7.32		116	8450	0.30	878	1920	0.02		#VALUE!	602		176		1090	3680	#VALUE!
TLP1488		7/5/01	7.04		64	8260	0.80	695	1600	0.03		#VALUE!	562		138		983	4100	0.05
TLP1488		7/9/01	7.49		79	8250	0.80	962	2070	0.04		#VALUE!	413		151		1350	3240	0.04
TLP1488		7/12/01	7.25		90	7830	0.10	886	1800	0.04		#VALUE!	504		141		1090	3440	0.02
TLP1488		7/19/01	8.44		66	7720	1.00	844	1730	0.11		#VALUE!	459		143		1077	3260	0.06
TLP1488		7/23/01	6.62		49	8430	0.10	949	1820	#VALUE!		#VALUE!	598		159		1193	2640	0.04
TLP1488		7/27/01	7.40		65	8500	#VALUE!	791	1940	0.05		#VALUE!	517		139		1280	3454	0.04
TLP1488		7/30/01	7.17		55	8770	0.20	817	2060	0.02		#VALUE!	493		154		1380	3570	0.03
TLP1488		8/2/01	7.26		57	10100	1.10	798	1890	0.08		#VALUE!	539		145		1255	3244	0.06
TLP1488		8/6/01	7.00		69	8380	0.10	862	2050	0.52		#VALUE!	531		156		1320	3318	0.02
TLP1488		8/9/01	7.03		62	8460	1.40	794	2170	0.14		#VALUE!	582		156		1170	3888	0.07
TLP1488		8/13/01	7.27		78	8320	0.10	904	2130	0.03		#VALUE!	478		154		1330	3512	#VALUE!
TLP1488		8/16/01	6.85		50	8680	1.20	759	1990	0.12		#VALUE!	600		153		1260	3720	0.09
TLP1488		8/20/01	6.98		54	9110	0.80	744	2220	0.16		#VALUE!	596		159		1350	3430	0.04
TLP1488		8/23/01	7.14		54	8800	1.70	940	2100	0.39		0.3	557		170		1390	3440	0.1
TLP1488	D	8/27/01	7.02		56	8170	0.60	865	2000	0.04		#VALUE!	594		150		1360	3910	#VALUE!
TLP1488		8/30/01	6.89		62	8830	1.00	788	2140	0.76		#VALUE!	610		168		1310	3620	0.07
TLP1488		9/6/01	7.09		61	8670	0.16	736	2110	0.78		#VALUE!	577		145		1270	3490	0.03
TLP1488		9/10/01	7.14		67	8710	#VALUE!	829	2080	0.05		#VALUE!	601		145		1370	3600	0.04
TLP1488		9/13/01	7.14		62	8310	0.30	901	2060	0.04		#VALUE!	653		161		1400	3760	0.03
TLP1488		9/17/01	6.93		62	8580	0.10	852	2190	0.03		#VALUE!	673		154		1390	3670	0.04
TLP1488		9/24/01	7.3		79	9380	0.1	900	2230	0.02		#VALUE!	766		168		1580	3800	#VALUE!
TLP1488		9/27/01	6.98		55	9060	2.8	824	2280	0.09		0.6	654		158		1430	3810	0.13
TLP1488		10/1/01	7.18		99	8630	0.1	779	1960	0.05		#VALUE!	678		149		1340	3550	0.03
TLP1488		10/4/01	6.89		42	9300	#VALUE!	753	2120	0.02		#VALUE!	760		163		1370	3720	0.06
TLP1488		10/11/01	7		47	7560	0.1	734	2150	0.05		#VALUE!	524		144		1170	4380	0.04
TLP1488		10/18/01	6.95		62	8190	#VALUE!	639	1940	0.07		#VALUE!	592		127		1110	3670	0.08
TLP1488		10/25/01	6.97		63	8800	PEND	628	1990	PEND		PEND	625		131		1090	4260	PEND